Siargo Ltd.

FS4308 User Manual VA.3.02

MEMS mass flow sensors

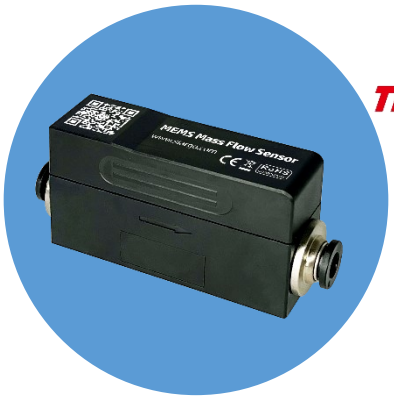

Thermal - D®

©2025 Siargo Ltd.

MEMS Mass Flow Sensor

With MEMS Thermal-D® sensing technology

FS4308 Series

User Manual

Document No. 10-2025-FSTD-3 EN
Issue date: 2025.10
Revision: VA.3.02

Siargo Ltd.
4677 Old Ironsides Drive, Suite 310,
Santa Clara, California 95054-1857,
USA

Tel: +1(408)969-0368
Email: Info@Siargo.com

© Copyright 2025 by Siargo Ltd.
Siargo Ltd. and its subsidiaries reserve the right to change the specifications and/or descriptions without prior notice. For further information and updates, please visit: www.Siargo.com

Attention!

- Please carefully read this manual before operating this product.
- Do not open or modify any hardware which that lead to irreparable damage.
- Do not use this product if you suspect any malfunctions or defects.
- Do not use this product for corrosive media or in a strong vibration environment.
- Use this product according to the specified parameters.
- Only the trained or qualified personnel shall be allowed to perform product services.

Use with caution!

- Be cautious of the electrical safety, even if it operates at a low voltage, any electrical shock might lead to unexpected damage.
- The gas to be measured should be clean and free of particles. Do not apply this meter to a liquid medium.
- Do not apply for any unknown or non-specified gases that may damage the product.
- For remote data, please be sure the meter is properly configured.

Table of Contents

1. Overview 5
2. Receipt / unpack of the products 6
3. Knowing the products 7
   3.1. Product description 7
   3.2. Power and data cable description 7
   3.3. Mechanical dimensions 8
4. Installation 9
5. Operation and MENU description 11
   5.1 Check the product specifications 11
   5.2 Check the leakage 11
   5.3 Power the product and digital data connection 11
   5.4 RS485 Modbus / RS232 communication protocol 12
      5.4.1 Hardware connection 12
      5.4.2 Communication parameters 13
      5.4.3 Frame 13
      5.4.4 Function codes 14
      5.4.5 Registers 14
   5.5 I²C communication protocol 17
      5.5.1 I²C interface connection diagram 17
      5.5.2 I²C interface read/write sequences 17
      5.5.3 I²C interface command description 18
      5.5.4 CRC checksum calculation 18
   5.6 Analog output (1 ~ 5 Vdc) 19
   5.7 Pressure loss 19
6. Product selection 21
7. Technical specifications 22
   7.1 Specifications 22

7.2 Wetted materials 23
8. Technical notes for the product performance 24
8.1 Measurement principle 24
8.2 Precautions for the best performance of the product 24
8.2.1 Comparison with a third-party reference meter 24
8.2.2 Particle contamination and fluidic cleanness 25
8.2.3 Apply to a different gas medium 25
8.2.4 Recalibration and maintenance 26
9. Troubleshooting 27
10. Warranty and Liability 28
11. Service/order contact and other information 30
Appendix I: Product evaluation kit 31
Appendix II: Document history 32

1. Overview

All contact information can be found at the end of this manual.

This manual provides essential information for the FS4308 series of gas mass flow sensors for general-purpose gas flow monitoring and control applications with a full-scale mass flow rate ranging from 2 to 50 SLPM, featuring both analog and digital outputs. The product performance, maintenance, troubleshooting, product ordering, technical support, and repair are also included.

FS4308 mass flow sensors are designed for general-purpose, precise gas metering, processing, monitoring, and/or control. The products are equipped with enhanced flow conditioning compared to the FS4008 series. It is more flexible during installation. Consequently, the products will have a pressure loss about 5 times higher than that for FS4008, but still lower than most of the offers on the market for a similar dynamic range. FS4308 also has a smaller footprint compared to FS4008. It can be applied for pneumatic control, process automation, and other industrial applications where the pressure drop is not a critical parameter. The series offers a wide dynamic flow range with a working pressure rating of up to 0.8 MPa (8 bar or 120 PSI), and a compensated temperature range of -10 to 55°C.

The products are designed for easy mechanical connector changes. The standard connectors are BSPT 1/4", one-touch connectors of 4mm, 6mm, or 8 mm. Other customized connectors are available upon request.

The sensing elements are manufactured using Siargo's proprietary MEMS (micro-electro-mechanical systems) thermal mass flow sensing technologies (Thermal-D®), which measure the calorimetry and diffusivity of the flow medium. The sensor surface is passivated with silicon nitride ceramic materials and a water/oilproof nano-coating for performance and reliability. Compared to conventional calorimetric flow sensing technology, this unique sensing approach offers improved linearity, removes gas sensitivity for gases with similar thermal diffusivities, and improves temperature performance. It can also auto-recognize pre-programmed gases with significant differences in thermal diffusivity. It is the first of its kind in the industry. It senses the mass flow with multiple gases without a manual gas conversion factor. As such, it ensures high precision for gas measurements with air calibration.

Thermal-D ® is a trademark of Siargo's thermal sensing technology.

2. Receipt / unpack of the products

Upon receipt of the products, please check the packing box before dismantling the packing materials. Ensure no damage during shipping. If any abnormality is observed, please contact and notify the carrier who shipped the product, and inform the distributors or sales representatives if the order is not placed directly with the manufacturer. Otherwise, the manufacturer should be informed. For any further actions, please refer to the return and repair section in this manual.

If the packing box is intact, proceed to open it. You will find the product, the power. And the data cable, as shown below.



Figure 2.1: FS4308 flow sensor



Figure 2.2: data cable

Please immediately check the integrity of the product as well as the power and data cable. If any abnormality is identified, please notify the distributor/sales representative or manufacturer as soon as you can. If any defects are confirmed, an exchange shall be arranged immediately via the original sales channel. This user manual shall either be included in the packing box, or an electronic version shall be provided upon request online. In most cases, this manual will be made available to the customer before the actual order.

In most cases, this manual will be made available to the customer before the actual order.

The standard cable is 0.5 meters. It ends with an AMPMODU MTE (5 positions) compatible connector.

3. Knowing the products

3.1. Product description

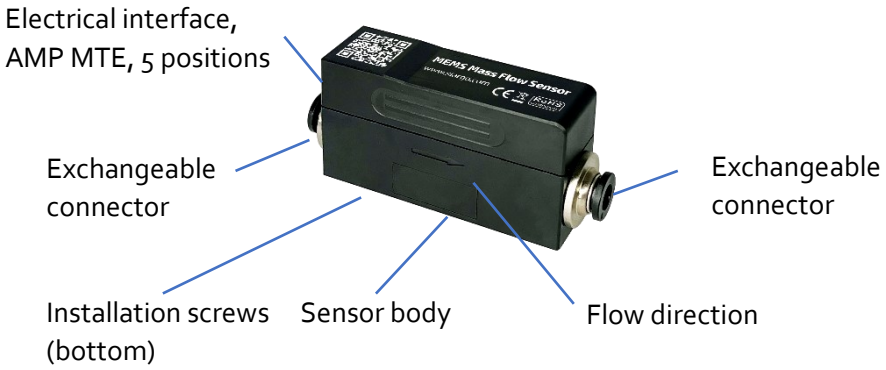

Figure 3.1: FS4308 parts description

3.2. Power and data cable description

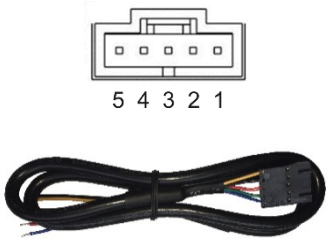

Figure 3.2: FS4308 connection and cable

Table 3.1: FS4308 pin/wire assignments.

Wire	Color	Definition
1	Blue	RS232 TX / RS485B (-) / SDA, I²C data
2	Green	Analog output, 1~5Vdc
3	Red	Power supply, 8 ~ 24 Vdc
4	Black	Ground
5	Yellow	RS232 RX / RS485A (+) / SCL, I²C clock

Note: 1. The standard cable has an AMPMODU MTE (5 positions) compatible connector with a length of 0.5 meters.

2. The product offers three digital communications as options: RS232, RS485, or I2C, which can be selected at the time of order. These three communication protocols share the ports as defined in Table 3.1. For the detailed protocols of the corresponding option, please refer to Section 5.

3. The RS232 communication is bi-directional. TX is the transmit pin that sends data from the product. RX is the receive pin.

4. The RS485 Modbus is asynchronous, half-duplex communication. When the data is transmitted or received from the product, the other pin serves as the ground.

.

3.3. Mechanical dimensions

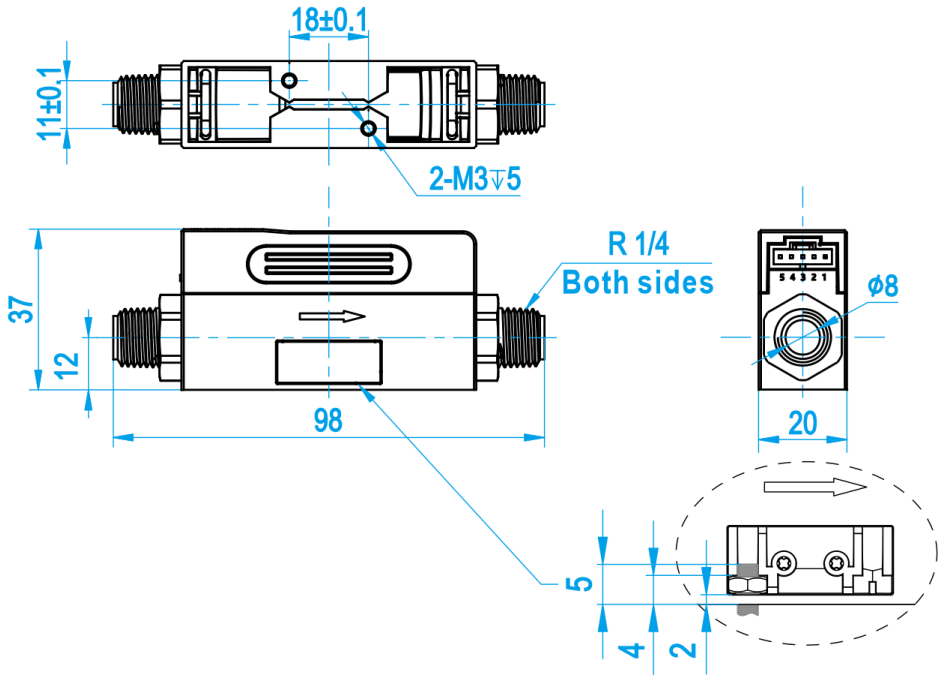

Figure 3.3: FS4308 dimensions with BSPT (R 1/4") connectors.

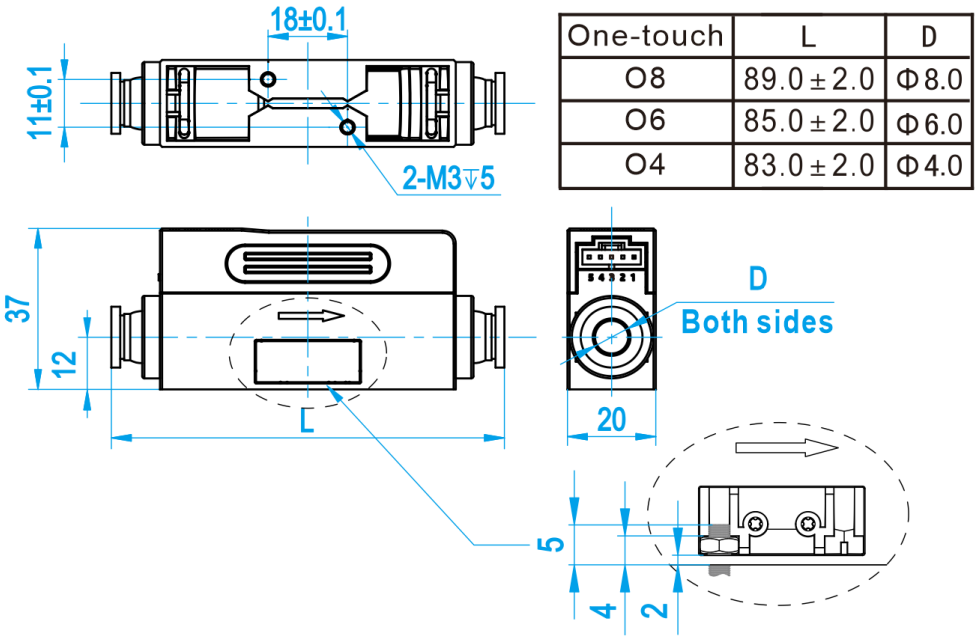

One-touch	L	D
O8	89.0 ± 2.0	Φ8.0
O6	85.0 ± 2.0	Φ6.0
O4	83.0 ± 2.0	Φ4.0

Figure 3.4: FS4308 dimensions with one-touch connectors.

Note: * Other threads or compressive types can be customized.

4. Installation

Do not open or alter any part of the product that would lead to malfunction and irrecoverable damage. It will forfeit the terms of the warranty and expose the party to liability.

The product at the time of shipment is fully inspected for quality and meets all safety requirements. Additional safety measures should be applied during the installation. This includes, but is not limited to, the leakage verification procedures, standard EDS (electrostatic discharge) precautions, and DC voltage precautions. Other tasks, such as calibration, part replacement, repair, and maintenance, must only be performed by trained personnel. Upon request, the manufacturer will provide necessary technical support and/or training for the personnel.

There are no preferred space directions for the installation. The flow direction should be aligned with the arrow mark on the sensor body. If the flowing fluid may have particles or debris, a filter is strongly recommended to be installed upstream of the sensor.

Please follow the following steps to complete the installation:

a) Upon opening the package, the product's physical integrity should be inspected to ensure no visual damage.

b) Before installation of the product, please ensure that the pipe debris or particles, or any other foreign materials, are completely removed.

c) Close the upstream valve, if any, completely.

d) During installation, please make sure no foreign materials (such as water, oil, dirt, particles, etc.) enter the installation pipeline.

e) Connect electrical wires per the wire definition in Table 3.1. Please ensure the power supply range (i.e., 8~24 Vdc) and power supply polarization. If an adapter is used, it must meet industrial standards and have all safety certifications. Alternatively, this product can also be powered by a 9V DC battery.

f) For the data communication wire connection, please follow the description in Table 3.1 and make sure that the wires are correctly connected to the proper ports on your data device/equipment. Please ensure the data cable meets industrial standards with shielding.

g) Slowly open the valve(s) of the gas supply, if any, upstream or downstream, or both of the pipelines. The product should then start to measure the flow in the pipeline. Note: the sensor has an extensive dynamic measurement range. It is normal for a small instant flow rate to exist even if there is "no flow" in the pipeline. If the value is consistently present, double-check the pipe leakage and then reset the offset if you are sure there is no leakage or flow.

h) Slowly open the valve(s) of the gas supply, if any, upstream or downstream, or both of the pipelines. The product should then start to measure the flow in the pipeline. Note: The meter has an extensive dynamic measurement range. It can be normal to see a small instant flow rate, even if there is "no flow" in the pipeline. If the value is consistently present, double-check the pipe leakage and then reset the offset if you are sure there is no leakage or flow.

i) This will conclude the installation.



Cautions:

a) Don't alter any parts of the product.

b) Ensure the electrical connection is done correctly per the instructions.

c) Make sure no mechanical stresses in the connections.

d) The strong electromagnetic interference sources close by or any mechanical shocks at the pipeline may also create malfunctioning of the product.

e) Slowly open/close valves at the gas supply piping to prevent abrupt pulse flow impact.

5. Operation and MENU description

5.1 Check the product specifications

Before using this product, verify the product specifications in this manual or the basic information in the datasheet on the company's website www.Siargo.com.

The detailed product technical specifications can be found in Section 7. For a specific application, the pressure rating must be lower than the system pressure. The flow range should also be within the specified range. The gas medium for the controller must also be consistent with that specified by the product. Be particularly cautious about the supplied voltage indicated in the specification. A higher voltage may lead to irreparable damage. A lower voltage will not power the product for any desired functions.

For the product's optimal performance, the gas to be applied must be clean and free of particles or other foreign materials.

5.2 Check the leakage

Check gas leakage in the pipe system before the operation. Pressurized nitrogen or air can be used for the leakage check.

5.3 Power the product and digital data connection

Although this product complies with the CE-required EMC regulations, it also requires that the product usage follow standard electrical device practice. Before connecting the product to external DC power, make sure the supply voltage is within the range specified in Section 7. Be cautious of standard electrical device precautions, such as ESD(electrostatic discharge) and DC voltage, which are observed. Excessive electrostatic discharge may damage the product.

The manufacturer-supplied power and data cable has a locking fixture. Fasten the cable until it is properly engaged and will not be accidentally unplugged.

RS232, half-duplex RS485, Modbus, or I^2C is used for digital data communication. Make sure the wires are correctly connected to the receiver side.

5.4 RS485 Modbus / RS232 communication protocol

The digital communication protocol is based on the standard Modbus RTU Half-plex mode or the RS232 communication protocol. A master (PC or PLC) can communicate with multiple slaves (the current product) for data exchange and configuration of communication parameters. Refer to Table 3.2 for the cable connection. RS232 only supports single-meter communication, and Flow control is always NONE.

5.4.1 Hardware connection

The RS485 Modbus / RS-232 hardware layer is TIA/EIA-485-A, as illustrated below. In this configuration, the product (FS4308) is a slave.

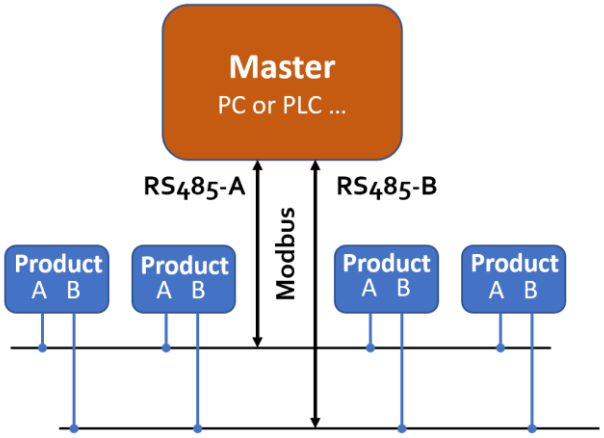

Figure 5.1: RS485 hardware

5.4.2 Communication parameters

The PC UART communication parameters are listed in Table 5.4.1.

Table 5.4.1: PC UART communication parameters

Parameters	Protocol
	RTU
Baud rate (Bits per second)	38400 bps (default)
Start bits	1
Data bits	8
Stop bits	1
Even/Odd parity	None
Bits period	104.2 µsec
Bytes period	1.1458 msec
Maximum data length	20
Maximum nodes	247

5.4.3 Frame

The frame function is based on the standard Modbus RTU framing:

Table 5.2: frame function

Start_bits	Address	Function codes	Data	CRC	Stop_bits
T1-T2-T3-T4	8 bit	8 bit	N 8 bit (20≥n≥0)	16 bit	T1-T2-T3-T4

Start_bits: 4 periods bit time, for a new frame.

Address: RS232: The address is 1 (0x01)

RS485: The address can be set from 1 to 247 except for 157 (0x9d).

Function codes: Define the product's functions/actions (slaves), either execution or response.

Data: The address of the register, the length of data, and the data themselves.

CRC: CRC verification code. The low byte is followed by the high byte. For example, a 16-bit CRC is divided into BYTE_H and BYTE_L. In the framing, the BYTE_L will come first, followed by the BYTE_H. The last one is the STOP signal.

Stop_bits: 4 periods bit time, for ending the current frame.

5.4.4 Function codes

The Modbus function codes applied for the product are a subclass of the standard Modbus function codes. These codes are used to set or read the registers of the product:

Table 5.3: function codes

Code	Name	Functions
0x03	Read register	Read register(s)
0x06	Set a single register	Write one single 16-bit register
0x10	Set multiple registers	Write multiple registers

5.4.5 Registers

The product (FS4308) has multiple registers available for various functions. With these functions, the user can acquire data from the products, such as product address and flow rates from the registers, or set the product functions by writing the corresponding parameters.

The currently available registers are listed in the following table. The registers may be customized upon contacting the manufacturer. Where R: read; W: write-only; W/R: read and write.

Note: At the time of shipping, the write protection function is enabled except for the address and baud rate. Once the user completes the register value change, write protection will be automatically enabled to prevent incidental data loss.

Table 5.4.5.1. Registers

Functions	Description	Register	Modbus
Address	Product address (R/W)	0x0081	40130 (0x0081)
Serial number	Serial number of the product (R)	0x0030 ~ 0x0035	40049 (0x0030)
Flow rate	Current flow rate (R)	0x003A ~ 0x003B	40059 (0x003A)
Temperature	Gas temperature	0x0040	40065 (0x0040)
Baud rate	Communication baud rate (R/W)	0x0082	40131 (0x0082)
GCF *	Gas conversion factor (R/W)	0x008B	40140 (0x008B)
Digital filter depth *	Response time or sampling time (R/W)	0x008C	40141 (0x008C)
Offset calibration	Offset reset or calibration (W)	0x00F0	40241 (0x00F0)
Write protection	Write protection of selected parameters (W)	0x00FF	40256 (0x00FF)

Notes: 1, R – Read-only, W – Write only, R/W – Read and write.

2. For the * marked functions, please disable the write protection before executing the command.

The detailed information on each register is described below: Y: enabled; N: disabled.

Address	**0x0081**	**Write**	Y
		Read	Y
Description	Address of the product		
Value type	UINT 16		
Notes	RS232: The address is 1 (0x01) RS485: Values from 1 to 247, excluding 157 (0x9d). The default address is 1. The broadcast address is not enabled.		

SN, Serial number	**0x0030 ~ 0x0035**	**Write**	N
		Read	Y
Description	Series Number of the product, SN		
Value type	ASCII		
Notes	SN= value(0x0030), value(0x0031),….,value (0x0035); **e.g.,** receiving 12 bits as: 2A 41 31 42 32 33 34 35 36 2A, the corresponding Serial Number is **A1B23456**.		

Flow rate	**0x003A ~ 0x003B**	**Write**	N
		Read	Y
Description	Current flow rate		
Value type	UINT 32		
Notes	Flow rate = [Value (0x003A) * 65536 + value (0x003B)] / 1000 **e.g.,** when the user reads "0" from register 0x003A and "20340" from register 0x003B, the current flow rate = (0 * 65536 + 20340) / 1000 = 20.340 SLPM		

Temperature	**0x0040**	**Write**	N
		Read	Y
Description	Gas temperature.		
Value type	UINT 16		
Notes	Ambient temperature = Value (0x0040) / 100 **e.g.,** for a gas temperature of 23.45 °C, the user will read "2345 (0x0929)" from register 0x0040, therefore Ambient temperature = 2345/100 = 23.45		

Baud rate	**0x0082**	**Write**	Y
		Read	Y
Description	Communication baud rate		
Value type	UINT 16		
Notes	0: baud rate=4800; 1: baud rate=9600; 2: baud rate=19200; 3 baud rate=38400. The default value is 3. **e.g.,** when the user reads "3" from register 0x0082, the baud rate is 38400.		

GCF	0x008B	Write	Y
		Read	Y
Description	The gas conversion factor applies to gases other than the calibration gas.		
Value type	UINT 16		
Notes	The GCF of air is 1000 (default), usually read from register 0x008B. **Notes: The product will disable this function with write protection once the metering gas is confirmed with the proper GCF. For a specific GCF value, please get in touch with the manufacturer.**		

Digital filter depth	0x008C	Write	Y
		Read	Y
Description	Data sampling setting in the software filter		
Value type	UINT 16		
Notes	0 ~ 9 programmable, corresponding to 2^0 ~ 2^9 data sampling in the software filter. The default value is 3, corresponding to 2^3 = 8 data sampling. **Notes: Please disable the write protection before executing this command.**		

Offset calibration	0x00Fo	Write	Y
		Read	N
Description	Reset or calibrate the offset.		
Value type	UINT 16, Fixed value 0xAA55		
Notes	To reset or calibrate the offset, write 0xAA55 to register 0x00Fo. **Notes: When you execute this command, make sure there is NO flow in the flow channel.**		

Write protection	0x00FF	Write	Y
		Read	N
Description	Write protection disabler for a set value to a specific register.		
Value type	UINT 16, Fixed value 0xAA55		
Notes	This function is enabled at the time of product shipment. To enable the write function of a specific parameter, such as GCF or offset, send 0xAA55 to register 0x00FF, and then the write function will be enabled (write protection is disabled). After the write execution is completed, the firmware will automatically re-enable the write protection.		

5.5 I²C communication protocol

5.5.1 I²C interface connection diagram

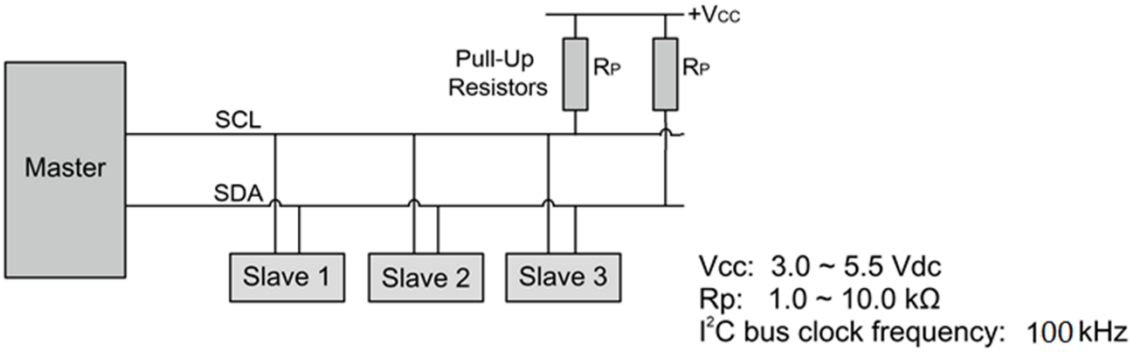

5.5.2 I²C interface read/write sequences

I²C reads:

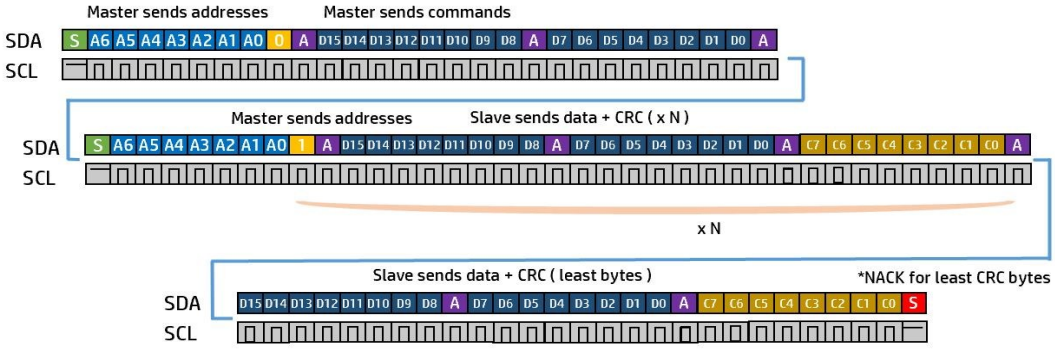

I²C writes:

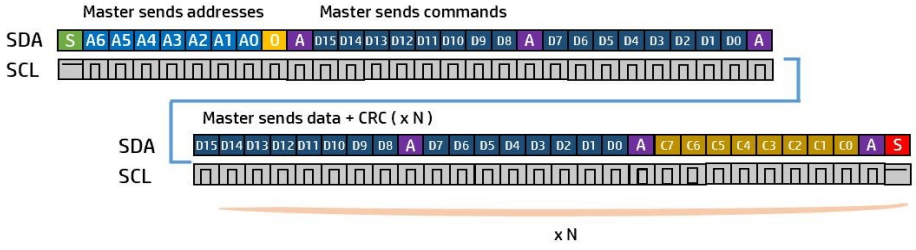

Note:

bit		
S	Start bit	Master pulls SDA from HIGH to LOW while SCL remains HIGH.
S	Stop bit	Master allows SDA to float from LOW to HIGH while SCL remains HIGH.
A	ACK	Acknowledgement
1	Read	(1 bit)
0	Write	(1 bit)
A6	Address	7 bits, the 7 most significant bits of the first transmitted byte. Default address: 1 (0000 001x)
D15	Data bit	16 bits
C7	CRC bit	8 bits

5.5.3 I²C interface command description

Command Byte	Length (int 16)	Command Name	Read/Write	Notes
0x00A4	1	I²C address	Read/Write	Int 16. Bit 0 is the R/W flag bit. bits 1 ~ 7 are available; bit 8 ~ bit 15 = 0. The default I²C address is 1. Hex: 0x0002 (write) /0x0003 (read), Bin: 0000 0000 0000 0010 (write) 0000 0000 0000 0011 (read).
0x0030	6	Sensor serial number	Read	ASCII
0x003A	2	Flow rate	Read	Int 32/1000 SLPM
0x0040	1	Temperature	Read	Int 16/100 °C
0x008B	1	Gas correction factor (GCF)	Read/Write	The gas conversion factor applies to gases other than the calibration gas.
0x008C	1	Filter depth	Read/Write	Int 16, 0 ~ 9, corresponding to 2^0 ~ 2^9 data in the software filter. The default value is 3, corresponding to 2^3 = 8 data in the software filter.
0x00F0	1	Reset the offset of the flow rate	Write	Fixed value, 0xAA55

Note: The I²C address is set to Bit 7~1, e.g., if the I²C address is 1 (0000 001x), the write address will be 0x02 (0000 0010) and the read address will be 0x03 (0000 0011).

5.5.4 CRC checksum calculation

The 8-bit CRC checksum transmitted after each of the two data bytes (int 16) is generated by a CRC algorithm. Its properties are listed in the table below. To calculate the checksum, only these two previously transmitted data bytes are used.

Property	Value
Name	CRC-8
Protected data	I²C read and write
Width	8 bits
Polynomial	0x07 (x8 + x2 + x + 1)
Initialization	0x00
Reflect input	False
Reflect output	False
Final XOR	0x00
Example	CRC(0x4E20) = 0x6D

5.6 Analog output (1 ~ 5 Vdc)

The product offers a voltage analog output of the instant flow rate. Refer to Table 3.1 for the wire connection for this output. The sensor is calibrated to 110% of the specified full-scale flow rate. The typical analog output is indicated below. This over-range applies to both analog and digital outputs.

Table 5.6.1. FS4308 analog outputs.

Flow rate	Analog output (Vdc)
0.00	1.00
10 % F.S.	1.40
20 % F.S.	1.80
40 % F.S.	2.60
50 % F.S.	3.00
70 % F.S.	3.80
90 % F.S.	4.60
100 % F.S.	5.00
110 % F.S.	5.40
120 % F.S.	5.40

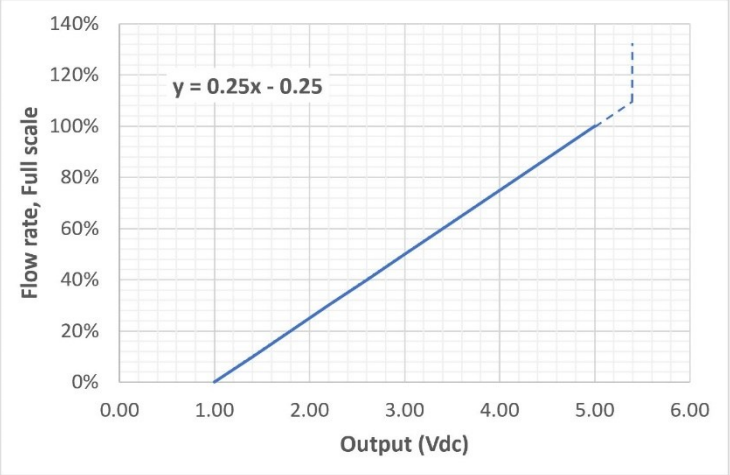

Figure 5.2: FS4308 analog output

5.7 Pressure loss

The product is designed for low-pressure loss. The following graph illustrates the pressure losses of the selected models.

Table 5.7.1. Pressure loss (full scale 2, 3, 4, 5 SLPM).

Flow rate (SLPM)	Pressure loss (Pa)			
	R 1/4	8mm	6mm	4mm
0.0	**0**	**0**	**0**	**0**
1.0	**10**	**15**	**20**	**30**
2.0	**25**	**30**	**40**	**80**
3.0	**40**	**50**	**60**	**150**
4.0	**60**	**70**	**90**	**240**
5.0	**80**	**100**	**130**	**370**

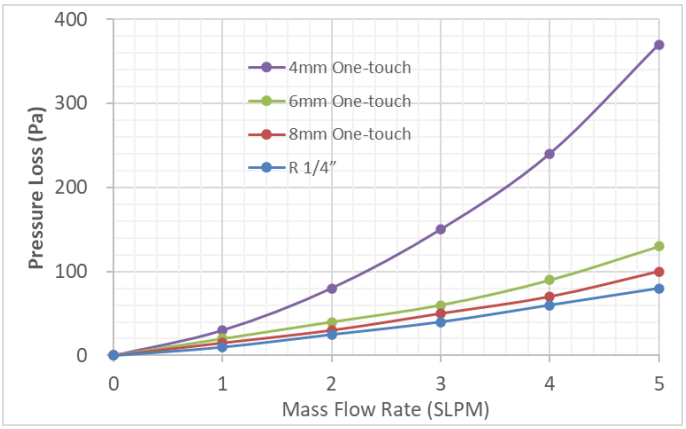

Figure 5.3: Pressure loss (full scale 2, 3, 4, 5 SLPM)

Table 5.7: Pressure loss (full scale 10, 20 SLPM)

Flow rate (SLPM)	Pressure loss (Pa)			
	R 1/4	8mm	6mm	4mm
0.0	0	0	0	0
5.0	50	60	80	130
10.0	150	170	250	450
15.0	300	350	500	850
20.0	500	600	800	1400

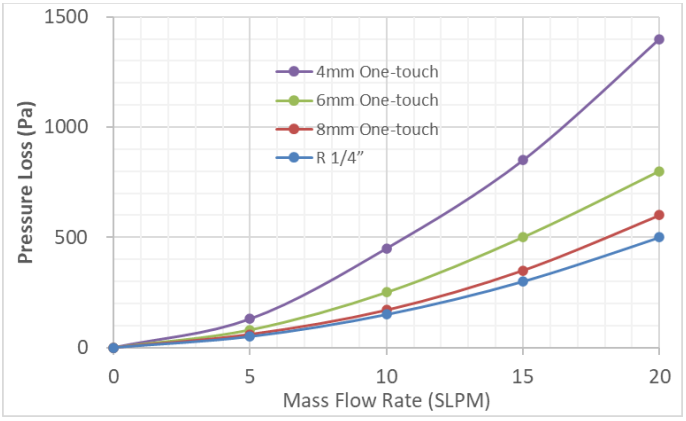

Figure 5.4: Pressure loss (full scale 10, 20 SLPM)

Table 5.8: Pressure loss (full scale 30, 40, 50 SLPM)

Flow rate (SLPM)	Pressure loss (Pa)			
	R 1/4	8mm	6mm	4mm
0.0	0	0	0	0
10.0	150	180	250	450
20.0	400	450	750	1500
30.0	900	1000	1600	3000
40.0	1500	1700	2600	4800
50.0	2200	2500	4000	7000

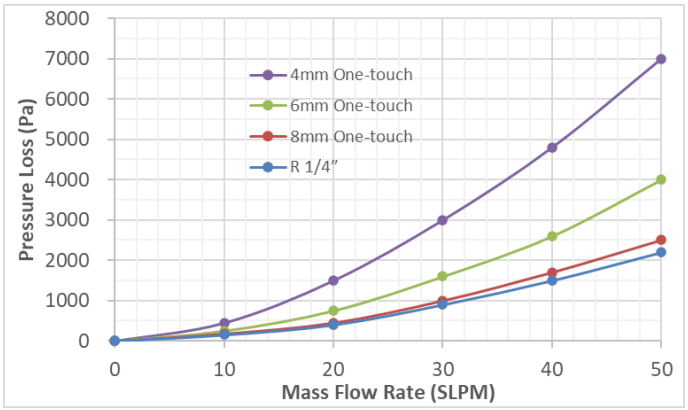

Figure 5.5: Pressure loss (full scale 30, 40, 50 SLPM)

6. Product selection

The product part number is composed of the product model number and suffixes indicating the full-scale flow rate, as well as the other parameters. Refer to the following for details.

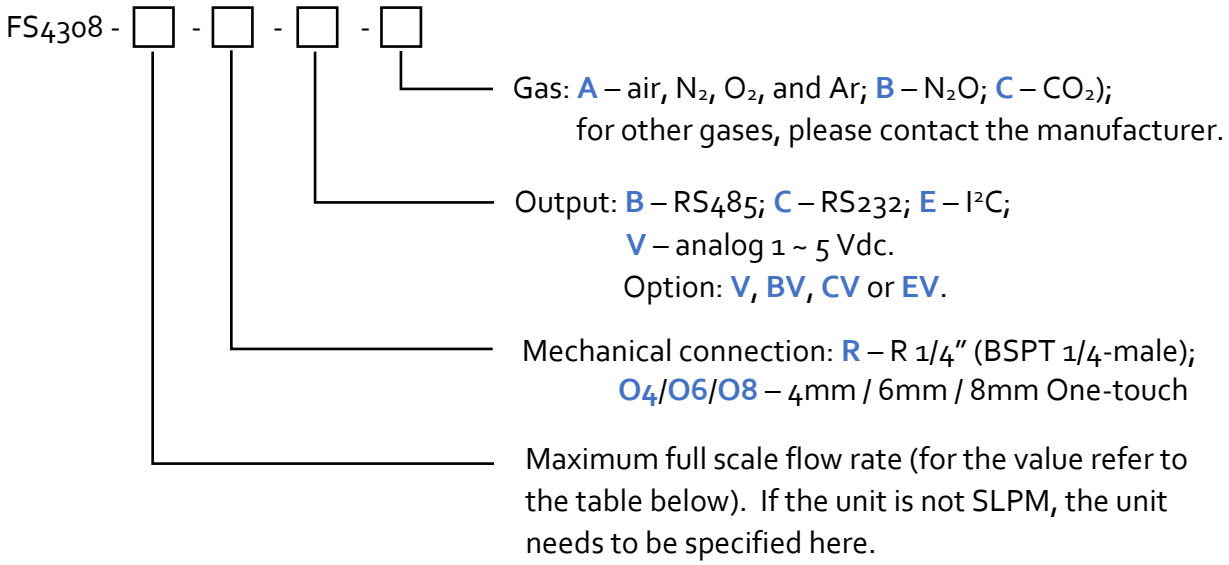

7. Technical specifications

7.1 Specifications

All specifications listed in the following table, unless otherwise noted, apply for calibration conditions at 20°C and 101.325 kPa absolute pressure with air. The product is horizontally mounted during calibration.

	Value	Unit
Full-scale flow range	2, 3, 4, 5, 10, 20, 30, 40, 50	SLPM
Accuracy	±(1.5+0.15FS)	%
Repeatability	0.5+0.05FS	%
Turn-down ratio	100:1	
Response time	10	msec
Filter depth	3 (default, 0 ... 9 programmable)	
Gas temperature	-10 ~ +55	°C
Gas temperature accuracy	±2.5	°C
Working temperature	-10 ~ +60	°C
Temperature coefficient	±0.12	%/°C
Maximum pressure	0.8	MPa
Humidity	<95, no condensation	%RH
Altitude	-400 ~ +4000 (610 ~ 1060)	m (hPa)
Max. overflow	30 100 200	SLPM
Max. flow change	4 15 30	SLPM/sec
Power supply	8 ~ 24 (50 mA)	Vdc
Analog output	1 ~ 5	Vdc
Null shift	±30	mVdc
Analog output load	Sourcing: 14; Sinking: 11	mA
Digital output	RS485 Modbus half-duplex / RS232 / I²C	
Electrical connector	AMPMODU MTE 5 positions	
Mechanical connection	R 1/4" (BSPT 1/4"-male), 4mm / 6mm / 8mm One-touch or customized	
Protection	IP40	
Storage temperature	-20 ~ +70	°C
Fluid compatibility	Non-corrosive	
CE	EN61000-2; -3; -4	
RoHS/REACH	Certified	

7.2 Wetted materials

The wetted materials include silicon nitride, FR4, and epoxy (Loctite Ablestik 84-3J). The product body (flow channel) is made with polycarbonate plus Acrylonitrile butadiene styrene (ABS). Other materials are stainless steel 304 and nitrile rubber.

8. Technical notes for the product performance

8.1 Measurement principle

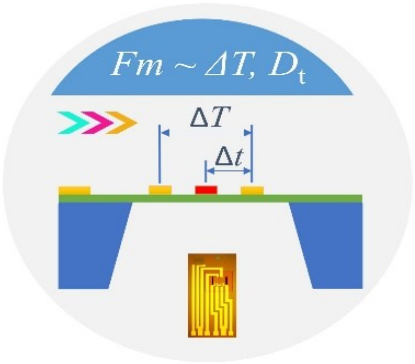

Figure 8.1: Measurement approach illustration.

The products utilize the Company's proprietary micro-machined (MEMS) thermal calorimetric sensing in time-domain data with a data processing algorithm (Thermal-D sensing). A thermal signal generator (microheater) with a pair of sensing elements is precisely manufactured upstream and downstream and separated at predefined micrometer distances on the chip surface under excellent thermal isolation. When a fluid flows through the sensing chip, the fluid carries the thermal signal downstream. The sensing elements register the amplitude, time, and temperature differences. It calculates the thermal diffusivity and further correlates with the fluid mass flow rate during the calibration process.

This unique thermal sensing approach offers an extensive dynamic range with better performance against environmental parameter alternations. It is the first of its kind in the industry, which allows gas property-independent mass flow measurements for gases with similar thermal diffusivities. It significantly simplifies process control with high precision and easy maintenance. Please refer to the company's USA patents and other publications made available for additional information.

8.2 Precautions for the best performance of the product

8.2.1 Comparison with a third-party reference meter

It is a general practice to compare the data from the product with a third-party reference meter, and in many cases, discrepancies can occur.

When performing such a comparison, please note that the reference meter should have a better-specified accuracy (approximately one-third of that specified by the product), and pay special attention to the differences in the reading accuracy and full-scale accuracy.

A full-scale accuracy = reading accuracy x (full-scale flow rate/ set point (current) flow rate)

Another key point to comparing the different flow meters is that as long as the fluidic flow is a continuous flow without pulsation, then the fluid dynamics will have the system following the Bernoulli equation:

$$P_1 + \frac{1}{2}\rho v_1^2 + \rho g h_1 = P_2 + \frac{1}{2}\rho v_2^2 + \rho g h_2$$

Where ρ is the fluid density, g is the acceleration due to gravity, P1 is the pressure of the reference meter, P2 is the pressure at the test meter, v1 is the velocity of the reference meter, and v2 is the velocity of the test meter. h1 and h2 are the corresponding heights for the meters, which are often the same in the system. Therefore, it will be important to ensure the system has no pressure variation. (This explains our recommendations for the installations in Section 4). In addition, the meter measurement principle is often the key to understanding any discrepancies.

Please note that for comparison with a rotameter, the reading can have large deviations due to differences in measurement principles. Particularly, a rotameter is sensitive to pressure and temperature variations.

8.2.2 Particle contamination and fluidic cleanness

Any contamination, including particles and liquid vapors, would be detrimental to the accuracy of the flow measurement and the meter's functionality. It is critical to ensure that the applied flow medium is clean and dry. If contamination is suspected, please allow experienced technical personnel to check and recondition it. Do not use foreign cleansers or other fluids to clean the flow path, as they could cause irreparable damage.

8.2.3 Apply to a different gas medium

The product is calibrated using a high-precision NIST-traceable metrological standard and clean and dry air. With this unique thermal sensing technology, the product can be applied to meters and control other clean and dry gases with similar thermal diffusivities without losing accuracy. It has effectively resolved the nonlinearity issues when applying to a gas conversion factor in calorimetric sensing, making the measurement highly accurate with an extensive dynamic range. Applicable gases include air, N_2, O_2, Ar, CH_4, and CO.

This innovative product also follows the basic sensing principle described in the international standard for thermal mass flow meters (ISO 14511:2001 - Measurement of fluid flow in closed conduits — Thermal mass flowmeters). For gases with different diffusivities, a gas conversion factor could be applied. For more information, contact your sales representative or manufacturer.

Under normal operation conditions, the wetted materials are fully compatible with common gases, such as air, oxygen, nitrogen, argon, and carbon dioxide. If a special gas is applied, please check the

gas compatibility data with the manufacturer. In some cases, packing materials may need to be changed for gas compatibility, or additional hazardous zone certification will be required before the products can be used.

8.2.4 Recalibration and maintenance

The recalibration of the controller depends on usage and application requirements. Therefore, it is a decision by the applications.

If preferred, Siargo can offer free calibration software or a user application kit to facilitate the customer's calibration requirements. Alternatively, contact your sales representative or contact the manufacturer for assistance. Siargo calibrates all products with NIST (National Institute of Standards and Technology, USA) traceable calibrators.

For maintenance, the services must be performed by trained or certified technicians by Siargo. Any changes to the products will void the product warranty. It could lead to irreparable damage to the products and could result in unexpected injuries.

The products do not require regular maintenance if the specified application conditions are exactly observed. Maintenance is required if indications of contamination or malfunctions are verified. In this case, contact your sales representative or directly contact customer support (information available on the Company's webpage) to obtain an RMA (Return Material Authorization) before shipping the products back to the Company's support center. Siargo commits to responding as fast as possible. Regular service will be performed within five business days if no major parts change is required.

9. Troubleshooting

Phenomena	Possible causes	Actions
No signal	The power is not connected; the battery is empty	Connect the power and then check the cable.
	Cable connection incorrect	Check the cable.
	No flow or clogging	Check flow and contamination.
	Power regulator failure	Return to the factory.
	Sensor failure	Return to the factory.
Significant errors or unexpected flow rate	Particles, fluid type	Check the system.
Erroneous or large noise	Vibration, unstable flow	Check the system.
Offset unstable	Circuitry instability	Check the system, power off
No digital interface	Wrong address, software	Check commands, connection

10.Warranty and Liability

(Effective January 2018)

Siargo warrants that the products sold hereunder, when used and installed properly under normal circumstances and services, will be free from defects. As described in this user manual, it shall be free from faulty materials or workmanship for 180 days for OEM products and 365 days for non-OEM products from the date of shipment. This warranty period is inclusive of any statutory warranty. Any repairs or replacement product shall bear the exact terms of this warranty.

Siargo makes no warranty, representation, or guarantee and shall not assume any liability regarding the suitability of the products described in this manual for any purposes that are not specified in this manual. Users shall be held fully responsible for validating the performance and suitability of the products for their particular design and applications. For any misuse of the products beyond the scope described herein, the user shall indemnify and hold Siargo, its officers, employees, subsidiaries, affiliates, and sales channels harmless against all claims, costs, damages, expenses, and reasonable attorney fees from direct or indirect sources.

Siargo makes no other warranty, express or implied, and assumes no liability for any special or incidental damage or charges, including but not limited to any damages or charges due to installation, dismantling, reinstallation, etc., or other consequential or indirect damages of any kind. To the extent permitted by law, the exclusive remedy of the user or purchaser, and the limit of Siargo's liability for any and all losses, injuries, or damages concerning the products, including claims based on contract, negligence, tort, strict liability, or otherwise shall be the return of products to Siargo, and upon verification of Siargo to prove to be defective, at its sole option, to refund, repair or replacement of the products. Regardless of form, no action may be brought against Siargo more than 365 days after a cause of action has accrued. The products returned under warranty to Siargo shall be at the user or purchaser's risk of loss and will be returned, if at all, at Siargo's risk of loss. Purchasers or users are deemed to have accepted this limitation of warranty and liability, which contains the complete and exclusive limited warranty of Siargo. It shall not be amended, modified, or its terms waived except by Siargo's sole action.

The product information in this manual is believed to be accurate and reliable at the time of release. They are made available to users. However, Siargo shall assume no responsibility for any inaccuracies and/or errors and reserves the right to make changes without further notice for the relevant information herein.

This warranty is subject to the following exclusions:

(1) Products that have been altered, modified, or have been subject to unusual physical or electrical circumstances, but not limited to those stated in this document or any other actions that cannot be deemed as proper use of the products;

(2) Products that have been subject to chemical attacks, including exposure to corrosive substances or contaminants. In the case of battery usage, long-term discharge, or leakage-induced damage;
(3) Products that have been opened or dismantled for whatever reason;
(4) Products that have been subject to working conditions beyond the technical specification as described by this manual or related datasheet published by the manufacturer;
(5) Any damages incurred by the incorrect usage of the products;
(6) Siargo does not provide any warranty on finished goods manufactured by others. Only the original manufacturer's warranty applies.
(7) Products resold by unauthorized dealers or any third parties.

11. Service/order contact and other information

Siargo Ltd. is making every effort to ensure the quality of its products. For any questions or product support, contact your direct sales representative. If you require additional assistance, contact the customer service at the address listed below. We will respond quickly to your requests and work with you to your complete satisfaction.

For sales or product orders, contact the local sales representatives or distributors listed on the company's webpage www.Siargo.com.

For any returns, contact your direct sales representative to obtain an RMA. For any further assistance, contact info@siargo.com to obtain additional information or a Return Materials Authorization (RMA) before shipping the product back to the factory for factory services such as calibration. In your email messages, please specify the status of the product you intend to return to the factory, and include your shipping address. Be sure to write the RMA on the returned package or include a letter with the RMA information.

Direct customer service request(s) should be addressed to

Siargo Ltd.
4677 Old Ironsides Drive, Suite 310,
Santa Clara, California 95054-1857, USA
Tel: +1(408)969-0368
Email: Info@Siargo.com

For further information and updates, please visit www.Siargo.com.

Appendix I: Product evaluation kit

Siargo offers a product evaluation kit. It includes a digital data converter, USB data cable, and User Application software. The kit provides the opportunity to quickly evaluate the product's performance on a Microsoft Windows-based computer. This kit can also be used for simple applications with digital data transfer. The user can read and visualize the flow rate, obtain the totalizer or accumulated flow rate, and save the data for further analysis. It can be connected to up to 128 meters using the RS485 serial interface.

For further information and to purchase the evaluation kit, contact the manufacturer or the sales representative.

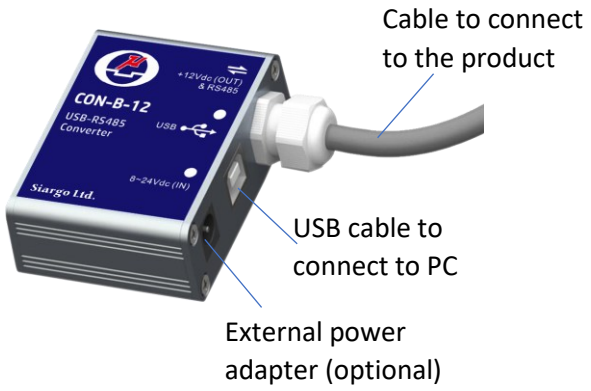

Each converter has a fixed cable that can be directly connected to the product. The USB cable to the PC is also included.

For most products, the power from the PC via the USB cable will be sufficient. No external power will be required. However, for multiple products connected in series, the power supplied by the USB cable may not be enough. An external power adapter with an 8-24V DC voltage will be required.

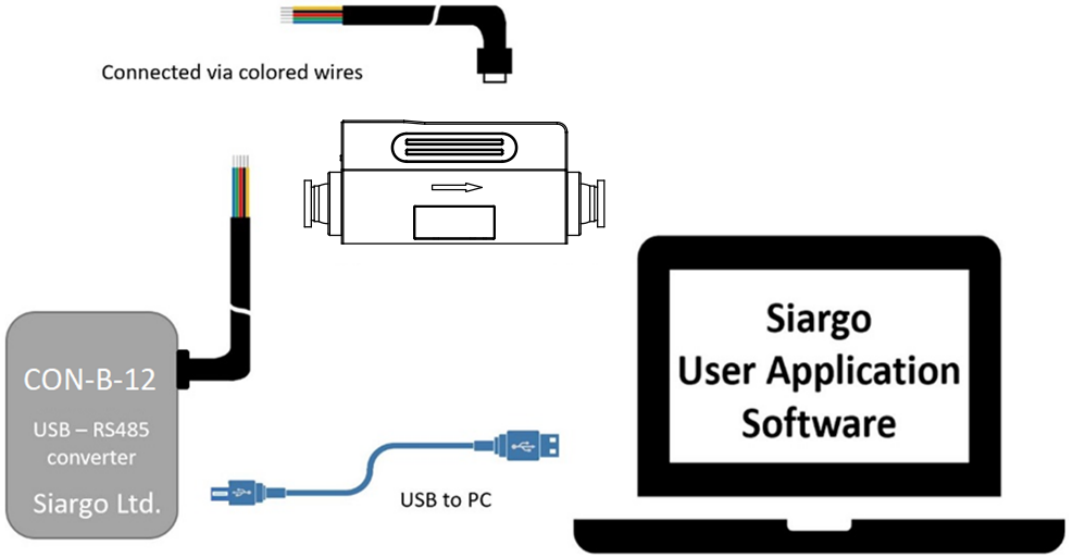

Appendix II: Document history

Revision VA.3.02 (October 2025)

- Revised the product selection.

Revision VA.3.01 (August 2025)

- Corrections.
- Add RS232 address.

Revision VA.3 (May 2025)

- Changed the product photo.
- Revised the accuracy to ±(1.5+0.15FS)%.

Revision VA.2.03 (October 2024)

- Remove RS232 output.

Revision VA.2.02 (August 2024)

- Minor corrections.

Revision VA.2.01 (May 2024)

- Revised the repeatability to (0.5+0.05FS)%.

Revision VA.2 (November 2023)

- Remove MF4308;
- Add RS232 output;
- Revised the maximum pressure to 0.8 MPa.

Revision VA.1 (August 2023)

- Add 2 ~ 5 SLPM models.

Revision VA.0.01 (June 2023)

- Update contact address.

Revision VA.0 (August 2022)

- Preliminary release.