GP-1401 Miniature Pressure Sensor

Features



- ✓ Pressure range 0~200 mbar … 0~10 bar
- ✓ Gauge and absolute pressure
- ✓ Constant current power supply
- ✓ mV output for OEM signal conditioning
- ✓ Measures non-conductive, non-corrosive gas
- ✓ Miniature Ø15 mm housing with M5 male port

Introduction

GP-1401 pressure sensor is a MEMS sensing die packaged in a miniature stainless steel housing. The measured pressure is transmitted directly to the silicon die through the M5 pressure port, and the pressure is converted to a voltage signal through a linear relationship. The sensor is temperature-compensated corrected and is suitable for use in tight spaces to measure various types of pressure in non-conductive, non-corrosive gases.

Parameters

Items	Parameters
Power supply	≤ 2.0 mA DC
Electric connection	Pin or wires
Input impedance	3 kΩ ~ 8 kΩ
Output impedance	3.5 kΩ ~ 6 kΩ
Response (10 %~90 %)	< 1 ms
Insulation resistor	100 MΩ, 100 V DC
Overpressure	1.5 x FS or ≤ 20 bar, min. value is valid
Pressure port material	Stainless steel SS 316L
Protection level	IP65
Net weight	~16 g
Orientation	Deviate 90° from any direction, zero change ≤ 0.05 %FS
Vibration	No change at 10 gRMS, (20~2000) Hz condition
Shock	100 g, 11 ms
Standard Condition	Media temperature: 25 ± 1 °C Environment temperature: 25 ± 1 °C Humidity: 50 ± 10 %RH Environment pressure: 860~1060 mbar Power supply: 1.5 ± 0.0015 mA DC

Kümago Nexus GmbH
Breite Straße 22
40213 Düsseldorf, Deutschland
https://kuemago.com info@kuemago.com +49(0)211 540747-030

Specification

Specification*	Typ.	Max.	Unit
Non-linearity	±0.15	±0.25	%FS, BFSL
Repeatability	±0.05	±0.05	%FS
Hysteresis	±0.05	±0.05	%FS
Zero output		±2	mV DC
FS output		≥50	mV DC
Zero thermal error	±0.75	±1.0	%FS, @25 °C
Span thermal error	±0.75	±1.0	%FS, @25 °C
Thermal hysteresis		±0.1	%FS
Long-term stability		±0.2	%FS/year
Compensated temperature	0~50		°C
Working temperature	-40~125		°C
Storage temperature	-40~125		°C

*Testing at standard condition

Dimensions (mm)

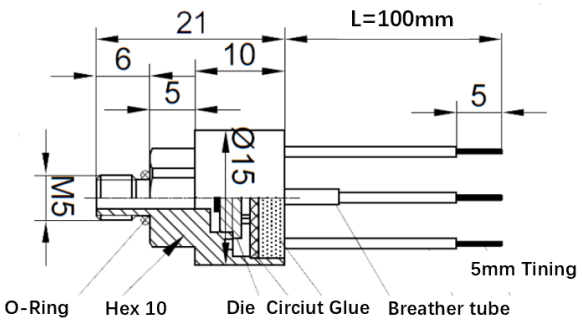

Ø15 mm housing
21 mm overall length
L =wires length to order

Electrical connections

Wire Color	Definition
Red	OUT +
Blue	OUT −
Yellow	IN −
Black	IN +

Order Guide

GP-1401	Miniature pressure sensor					
	Code 1	Range				
	0B	0~200 mbar (G)				
	0A	0~350 mbar (G)				
	02	0~700 mbar (G)				
	03	0~1 bar (G / A)				
	07	0~2 bar (G / A)				
	08	0~3.5 bar (G / A)				
	09	0~7 bar (G / A)				
	10	0~10 bar (G / A)				
		Code 2	Pressure type			
		G	Gauge			
		A	Absolute			
			Code 3	Process connection		
			44	M5 male		
				Code 4	Connector	
				Lxxx	Wires, default 100 mm	

Completed Sample:

GP-1401-03-G-44-L100

Kümago Nexus GmbH
Breite Straße 22
40213 Düsseldorf, Deutschland
https://kuemago.com info@kuemago.com +49(0)211 540747-030