Siargo Ltd.

LF3000 series

Microfluidic Flow Meters / Sensors

User Manual VA.3.04



@ 2025 Siargo Ltd.

www.Siargo.com

Microfluidic Flow Meters / Sensors

with thermal time-of-flight technology

LF3000 Series

User Manual

Document No. 08.2025-LF2.1 EN
Issue date: 2025.08
Revision: VA.3.04

Siargo Ltd.
4677 Old Ironsides Drive, Suite 310,
Santa Clara, California 95054-1857,
USA

Tel: +1(408)969-0368
Email: Info@Siargo.com

© Copyright 2025 and Liability Disclaimer
Siargo Ltd. and its subsidiaries reserve the right to change the specifications and/or descriptions without prior notice. Siargo and its subsidiaries shall not assume any inaccuracy or errors in this manual. For further information and updates, please visit www.Siargo.com.

Attention!

- Please carefully read this manual before operating this product.
- Do not open or modify any hardware that may lead to irrecoverable damage.
- Do not use this product if you suspect any malfunctions or defects.
- Do not use this product for corrosive media or in a strong vibrational environment.
- Use this product according to the specified parameters.
- Only the trained or qualified personnel shall be allowed to perform product services.

Use with caution!

- Be cautious of electrical safety, even if it operates at a low voltage; any electrical shock might lead to some unexpected damage.
- The liquid to be measured should be clean and free of particles, as even light particles may be accumulated inside the tiny flow channel that may result in inaccuracy in metrology, clogging, or other irrecoverable damage.
- Do not apply for any unknown or non-specified liquids that may damage the product.
- Be cautious of the bubbles or cavitation inside the fluid, visible or invisible, that may lead to inaccuracy or erroneous outputs.

Table of Contents

1. Overview 5
2. Receipt / unpack of the products 6
3. Knowing the products 7
   3.1 Product description 7
   3.2 Power and data cable description 7
   3.3 Mechanical dimensions 8
4. Installation 9
5. Basic operation 11
   5.1 Check the product specifications 11
   5.2 Check the microfluidic system 11
   5.3 Check the leakage 11
   5.4 Connect the power supply 12
   5.5 Analog interface/measurement 13
   5.6 Digital interface/measurement 14
   5.6.1 I²C communication protocol 15
   5.6.1.1 I²C interface connection diagram 15
   5.6.1.2 I²C interface read/write sequences 15
   5.6.1.3 I²C interface command description 16
   5.6.1.4 CRC checksum calculation 16
   5.6.2 RS485 Modbus communication protocol 17
   5.6.2.1 Hardware connection 17
   5.6.2.2 Communication parameters 17
   5.6.2.3 Frame 18
   5.6.2.4 Function codes 18
   5.6.2.5 Registers 18
6. Product selection 21
7. Technical specifications 22
8. Wetted materials and compatibility 23

9. Technical notes for the product performance 24
9.1 Measurement principle 24
9.2 Precautions for the best performance of the product 24
9.2.1 Particle contamination 24
9.2.2 Presence of bubbles or cavitation 24
9.2.3 Pressurized flow delivery 25
9.2.4 Continuous operation 25
9.2.5 Measurement of non-conventional fluid 25
9.2.6 Product calibration 25
9.2.7 Verification of the product's accuracy or reproducibility 26
10. Troubleshooting 27
11. Warranty and Liability 28
12. Service contact and information 30
Appendix I: Product evaluation kit 31
Appendix II: Document history 32

1. Overview

All contact information can be found at the end of this manual.

This manual provides essential information for the LF3000 series of flow meters and sensors for microfluidic metering applications. The product performance, maintenance, and troubleshooting, as well as the information for product order, technical support, and repair, are also included.

The LF3000 microfluidic flow meters and sensors are manufactured with the Company's proprietary MEMS (micro-electro-mechanical systems) thermal time-of-flight technology that offers high precision at large dynamic ranges starting from 10 µL/min up to 500 mL/min, water equivalent. The technology merits its temperature performance, fluidic property measurement, and fluidic independent metering. The flow channel is readily connected with the standard 1/4"-28 or other standard thread. The channel's wetted materials are tailored by Polyetheretherketone (PEEK) and silicon nitride (SiNx), or Polyphenylene Sulfide (PPS) and SiNx (see Table 6.1 for details), which allows chemical and bio-compatibility.

Thermal time-of-flight sensing is achieved by modulating a thermal transmitter and acquiring the modulated signals from the receivers at precise distances downstream. The predefined precise distance, together with the measured heat transfer time, allows accurate flow rate measurement for the fluids of interest.

The products are packaged with either stainless steel (meters) housings or aluminum alloy (sensors) in a miniaturized footprint for durability, liquid proof, and easy installation for instrumentation or manifold applications.

While the current packages are best for instrumentation, equipment, OEM, and/or laboratory applications, the manufacturer also offers alternative customized packages. For some medical or cross-contamination-sensitive applications, disposable options are available as well. For any other forms of packages that are not described in this manual, please get in touch with the manufacturer.

The default data interfaces include I^2C, RS485 Modbus, and voltage output. Other options include IO-Link or wireless data transmission. This variety of communication options covers most of the current and near-future application requirements, and each or multiple can be requested upon order from the manufacturer.

2. Receipt / unpack of the products

Upon receipt of the products, please check the packing box before dismantling the packing materials. Ensure no damage during shipping. If any abnormality is observed, please get in touch with the sender who shipped the product and notify them. If the order was not placed directly with the manufacturer, inform the distributors or sales representatives; otherwise, the manufacturer should be informed. Please refer to the return and repair section in this manual for any further actions.

If the packing box is intact, open it to find the product (either the meter or the sensor formality, as specified in the actual order), along with the power and data cable, as shown below.



Figure 2.1: LF3000 flow meter



Figure 2.2: LF3000 flow sensor



Figure 2.3: Power and data cable

Please check immediately for the integrity of the product and the power and data cable; if any abnormality is identified, please notify the distributor/sales representative or manufacturer as soon as possible. If any defects are confirmed, an exchange shall be arranged immediately via the original sales channel. (Note: the OLED screen shall not be lit until the power cable is plugged in.) This user manual shall also be included in the packing box or via an online request for an electronic version. In most cases, this manual shall be made available to the customer before the actual order.

Important: The basic specifications of the product are written in the 2D code on the back of the product. Use a smartphone to read the information and verify your order before further processing. If there are any questions or doubts, please contact the manufacturer or your sales agent.

3. Knowing the products

3.1 Product description

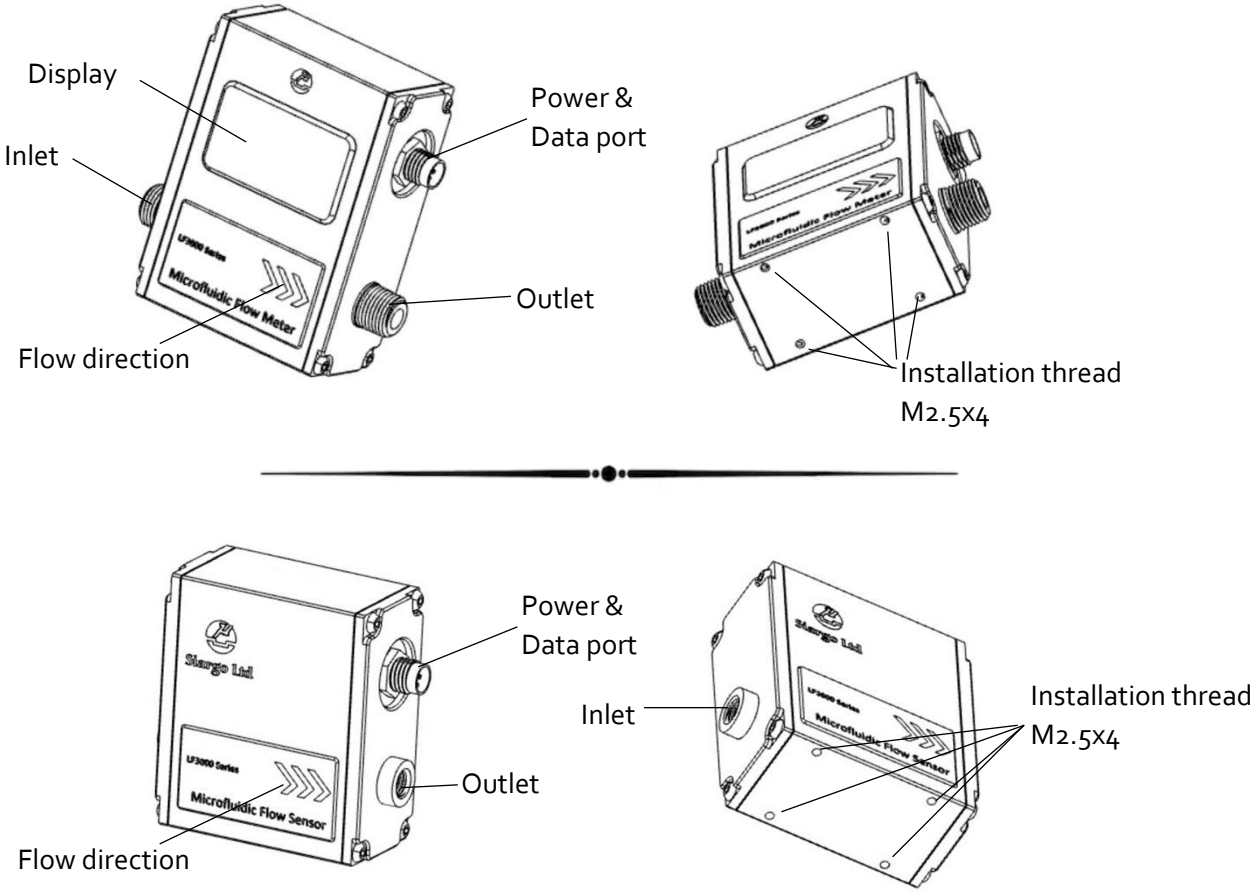

Note: For a full-scale flow rate over 50 mL/min, the fluidic channel connector can be fully customized. The default will be NPT.

3.2 Power and data cable description



Figure 3.1: LF3000 socket and cable

Table 3.1: pin assignment

Pin	Color	Definition
1	Brown	Power supply, 8 ~ 24Vdc
2	White	SDA, I²C data / RS485B (-)
3	Blue	Ground
4	Black	SCL, I²C clock / RS485A (+)
5	Gray	Analog output 0.5 ~ 4.5 Vdc

3.3 Mechanical dimensions

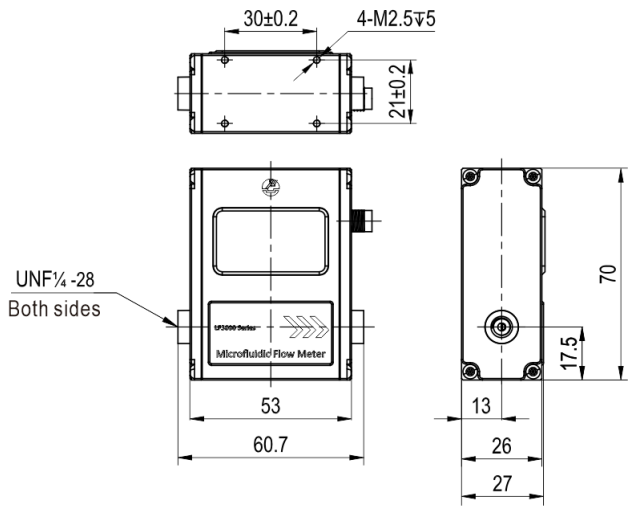

Figure 3.2: Dimensions of LF3000M-05 ~ 50.

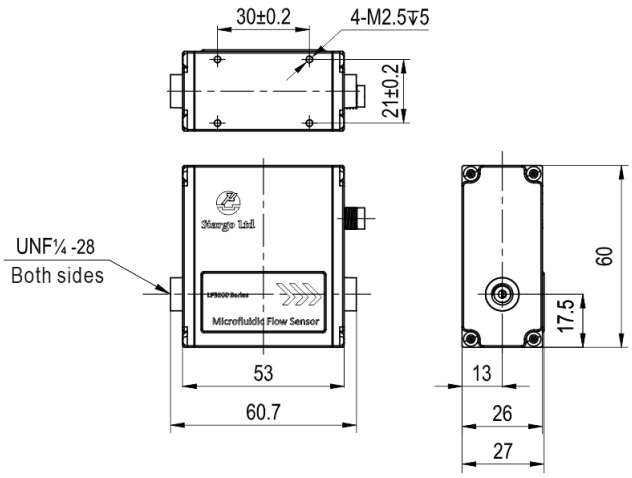

Figure 3.3: Dimensions of LF3000S-05 ~ 50.

See Section 6 for model numbers.

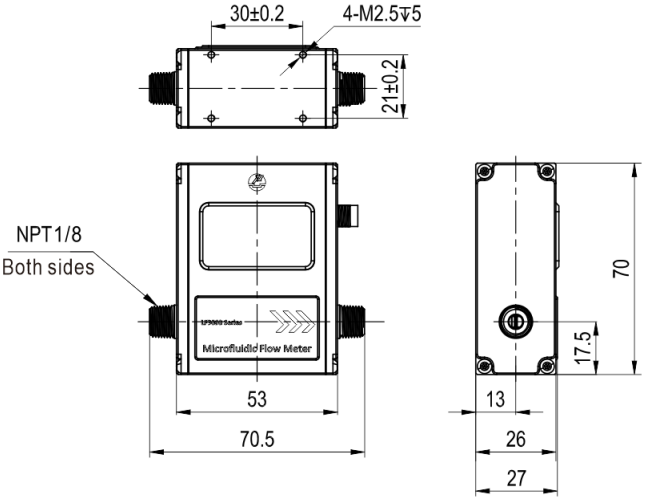

Figure 3.4: Dimensions of LF3000M-100 ~ 500.

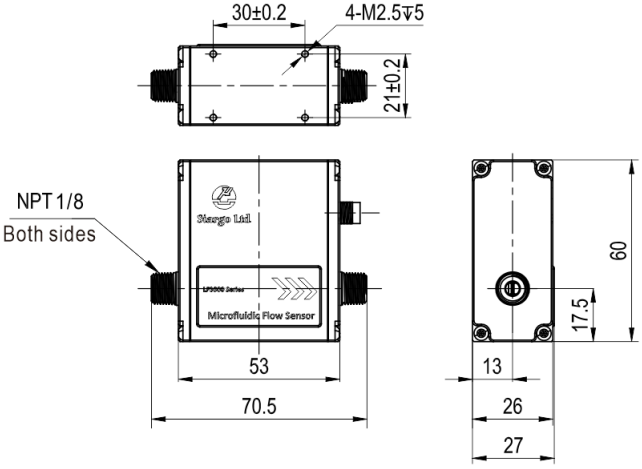

Figure 3.5: Dimensions of LF3000S-100 ~ 500.

4. Installation

Do not open or alter any part of the product, which would lead to malfunction and irreversible damage.

To ensure optimal product performance, it is recommended to install them on a base that minimizes environmental vibration. There are four pre-threaded M2.5 ports at the bottom of the product, as described below. A flat metal plate is suggested to be used as the holder before being fixed onto a solid base.

The product is preferably installed horizontally. If the vertical installation is required, the fluid in the tubing must be filled, particularly at the measurement position.

After the product is correctly fixed to a vibration-free base, the flow channel can be connected with the standard UNF 1/4"-28 connectors. Before connection, the tubing should be carefully checked for its integrity and cleanness. There must be no particles, dirt, grease, or other foreign materials inside the tubing. The connectors should also be free of any physical damage and clean without any visible contamination. After the connection, the tubing should not be twisted, and it is preferable to be kept straight or with fewer turns. If any turns must be present, each of the turns should be smooth without sharp bends.

For models with a flow rate higher than 50 mL/min, the default will be NPT threaded ports, or the other connections with full customization can be requested at the time of order. Make sure the flow direction on the meter/sensor is observed.

It is essential to ensure no bubbles inside the fluid for the product's best performance. It is highly recommended that a de-bubbler be installed before the flow meter/sensor.

The proposed installation schematics are shown in Figure 4.1.

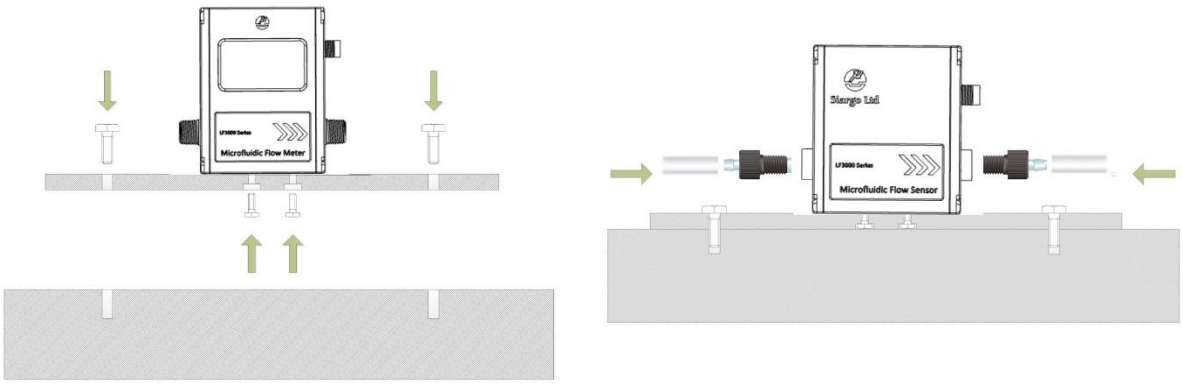

Figure 4.1: Suggested installation.

Note: Recommended connectors

1. IDEX-HS, P-647: Adapter, Barbed to Threaded Male, Tefzel™ (ETFE), for use with Soft-Walled Tubing, 1/4-28 Flat-Bottom Male, Tefzel™ (ETFE), for 1/8" ID.
2. IDEX-HS, D-648: Swivel Barb Adapter, for use with Soft-Walled Tubing, Polypropylene, for 1/8" ID
3. IDEX-HS, XP-305: Flangeless Fitting Delrin®, Green, 1/4-28 Flat-Bottom, for 1/8" OD tubing. For the model, LF3000-50, the required tubing ID is 1.8mm or larger.
4. IDEX-HS, XP-201: Flangeless Fitting Delrin®, Black 1/4-28 Flat-Bottom, for 1/16" OD tubing. Only for models LF3000-5 and lower flow rates.
5. Jaco Manufacturing, 25-4-2-C-PG: Female, Tube OD 1/4", Pipe thread 1/8", Acetal Copolymer, Nut with Plastic Gripper for use with plastic tubing. For model LF3000-100 and higher flow rates. Suggested tube ID: 4mm and larger.



P647



D648



XP-305



XP-201

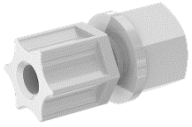

25-4-2-C-PG

5. Basic operation

5.1 Check the product specifications

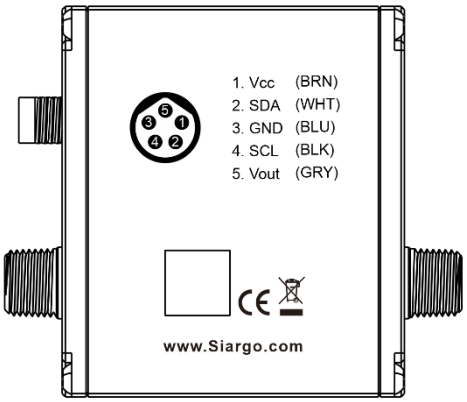

Before starting to use this product, check the product specifications found in this manual or the basic information located on the back panel of the product.

One can find the product information from this manual according to the model as defined in Section 6. Alternatively, use any optical scanner, such as those found on smart mobile devices, to read the 2D code on the label's basic product specifications. In particular, the pressure rating must not exceed the system pressure of the fluid to be measured, and the flow range should also be within the specified range. In most cases, a high full-scale range meter for the low flow rate measurement often results in erroneous data. The fluid to be measured must also be consistent with that specified by the product. Be particularly cautious about the supplied voltage indicated in the specification. A higher voltage may lead to irrecoverable damage, and a lower voltage will not power the product for any desired functions.

5.2 Check the microfluidic system

For the product's best performance, it is advised that the fluid to be measured must be clean and free of particles or other foreign materials. An upstream filter of 2μm pore size would be an example of safe product usage from particle contamination. Before releasing the fluid to pass through the product, recheck the tubing to avoid any twist or sharp bending, tighten the tubing fittings, and verify the measurement of the fluid flow direction.

5.3 Check the leakage

Check for leakage before taking any measurement. Pressurized nitrogen or air can be used for the leakage check, particularly if the fluid is non-conventional.

5.4 Connect the power supply.

Although this product complies with the CE-required EMC regulations, it also requires the product to be used according to the standard electrical device practice. Before connecting the product with the external power, ensure that the standard electrical device precautions, such as EDS (electrostatic discharge) and DC voltage, are observed. Excessive electrostatic discharge may damage the product. Use only the power and data cable shipped together with the product. The cable features a high-quality connector at one end, designed for plugging into the product, and the other end has multiple wire connections for various options. Other manufacturer-shipped cables may lead to malfunctions if not made correctly.

Pin	Color	Definition
1	Brown	Power supply, 8 ~ 24Vdc
2	White	SDA, I²C data / RS485B (-)
3	Blue	Ground
4	Black	SCL, I²C clock / RS485A (+)
5	Gray	Analog output 0.5 ~ 4.5 Vdc

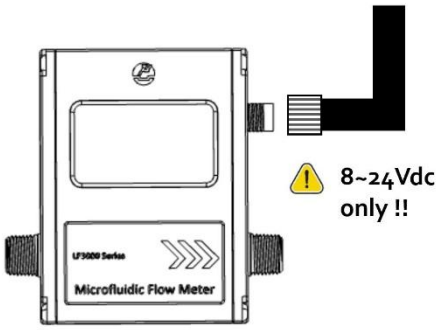

Figure 5.1: Power and data cable connection.

Plug the manufacturer-supplied cable into the meter or sensor, as shown in Figure 5.1. Please do not force the plug, or it may damage the product.

The other end of the cable has 5 pre-soldered wire terminals with different colors; refer to the above table for the connection information (the same as Table 3.1).

Take special care, connect only the power to the BROWN power cord/wire, and ensure the power supply is within the specified 8 ~ 24Vdc range before switching the power on. In addition, the power supply should be properly grounded by connecting the BLUE wire terminal to the ground on the power supply or another safe system ground.

The product's power terminal has the incoming voltage internally filtered and regulated to power the product circuitry. The product operates at a maximum current of less than 35mA, which is normally available for most of the power supply.

The terminal Vout (Gray) is for analog data output from 0.5 to 4.5 Vdc, corresponding to the specified flow range from zero to full-scale flow rate.

SDA (White) and SCL (Black) terminals are used for the I²C serial data line and serial clock line, which provide digital data communication and the remote control of the product.

Upon switching on the power supply, the meter OLED screen will be lit up, and for the sensor product, the status can be checked with the analog or digital interface.

5.5 Analog interface/measurement

After switching on the power supply, the OLED display screen will show two rows of data. The upper row is the instant flow rate in ccm (mL/min), and the lower row is the totalized or accumulated flow volume. The data are referred to the calibration condition at 20°C and 101.325 kPa.



Figure 5.2: The OLED display

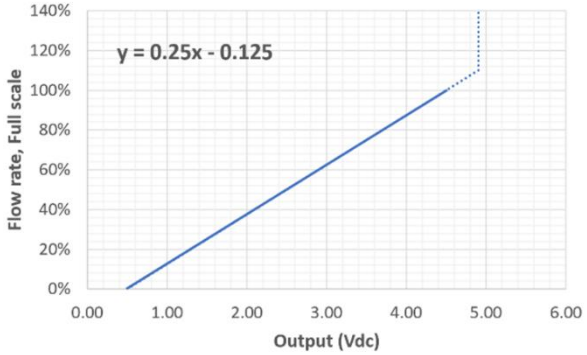

Figure 5.3: Analog output.

Unlike most traditional thermal flow meters, the current product does not require a warm-up time. However, for the best performance, wait for a few seconds for the electronics to be stable. The analog data can be acquired by connecting the analog terminal 4 (Gray). Figure 5.3 shows the correlation of the analog reading with the flow rate. For example, if one orders a model of the full-scale flow rate of 50 mL/min, then 0.50 Vdc corresponds to a zero flow rate, and 4.50 Vdc corresponds to 50 mL/min. For any given voltage output x (Vdc), the flow rate shall be (0.25x-0.125)*50 mL/min. Beyond this specified range, the voltage can also be read, but its accuracy is not guaranteed, as it is obtained by extrapolation (blue dashed line, maximum calibration to 110% full scale).

Another analog interface, such as 4~20mA, is also optional and can be requested by directly contacting the manufacturer.

5.6 Digital interface/measurement

The default digital interface for the current product is I²C or RS485 (Modbus). Another standard digital interface, such as IO-Link, is also available by request.

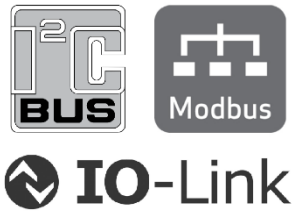

The corresponding protocol and a special cable for each of the specified digital interfaces are required. Please get in touch with the manufacturer for detailed information.

For the default I²C and RS485 (Modbus) digital interface, the manufacturer also provides Microsoft Windows-based evaluation software for simple operation and measurement tasks. Please get in touch with the manufacturer for detailed information.

For the default I²C digital interface, one can connect the SDA (White, data) and SCL (Black, clock) terminals of the provided cable to the corresponding port of an I2C bus interface on the user's electronics and proceed with the tasks desired.

The detailed instruction for coding and/or commands of the I²C protocol is described and listed below for reference.

Alternatively, one can order a conversion box from the manufacturer that includes an I2C to USB port converter, allowing it to be plugged into the computer for measurement. The detailed information is described in Appendix I.

5.6.1 I²C communication protocol

5.6.1.1 I²C interface connection diagram

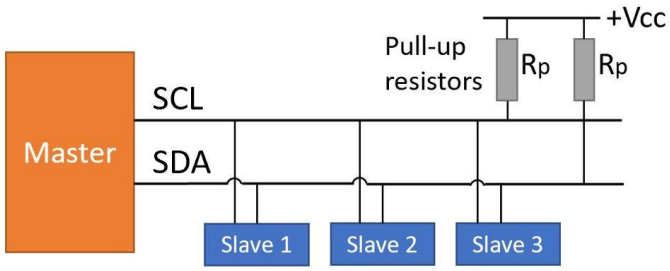

Vcc: 3.0 ~ 5.5 Vdc
Rp: 1.0 ~ 10.0 kΩ
I2C bus clock frequency: 100 kHz

5.6.1.2 I²C interface read/write sequences

I²C reads:

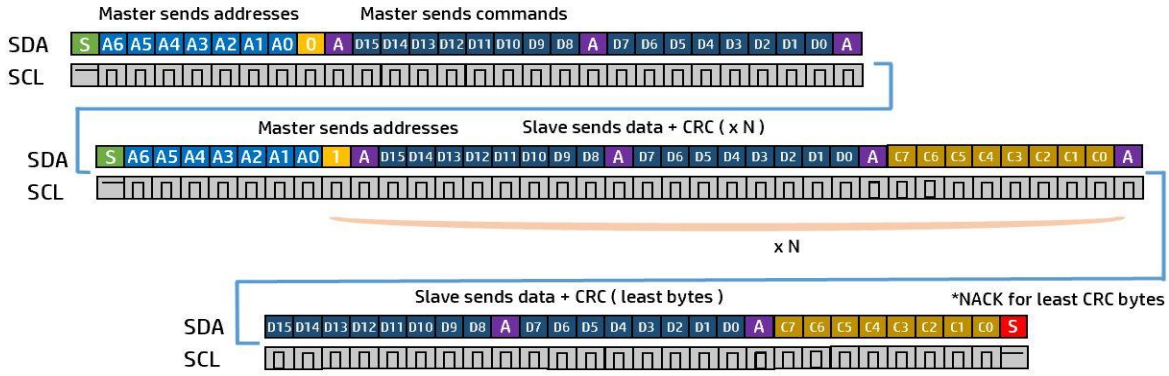

I²C writes:

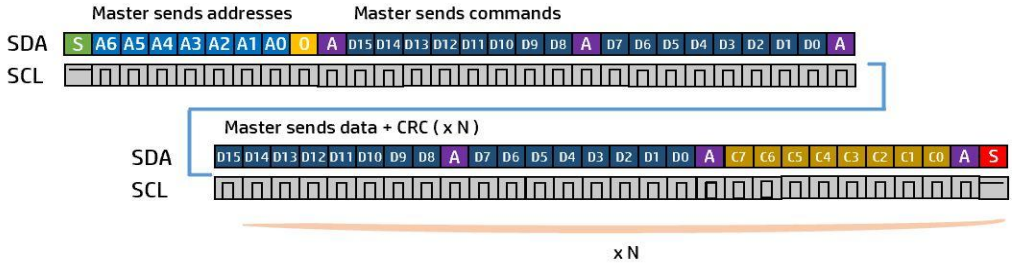

Note:

bit		
S	Start bit	Master pulls SDA from HIGH to LOW while SCL remains HIGH.
S	Stop bit	Master allows SDA to float from LOW to HIGH while SCL remains HIGH.
A	ACK	Acknowledgement
1	Read	(1 bit)
0	Write	(1 bit)
A6	Address	7 bits, the 7 most significant bits of the first transmitted byte. Default address: 1 (0000 001X)
D15	Data bit	16 bits
C7	CRC bit	8 bits

5.6.1.3 I²C interface command description

Please note the addition of the CRC in the protocol. If you are using an older version, you may need to update your firmware for the current products.

Command Byte	Length (int 16)	Command Name	Read/ Write	Notes
0x00A4	1	I²C address	Read/ Write	Int 16. Bit 0 is the R/W flag bit. bits 1 ~ 7 are available; bit 8 ~ bit 15 = 0. The default I²C address is as follows. Hex: 0x0002 (write) /0x0003 (read), Bin: 0000 0000 0000 0010 (write) 0000 0000 0000 0011 (read).
0x0030	6	Sensor serial number	Read	ASCII
0x003A	2	Flow rate	Read	Int 32 / 1000 mL/min
0x003C	3	Totalizer or accumulated flow rate	Read	(Int 32 + Int 16 / 1000) mL Accumulated flow rate = Value (0x003C) * 65536 + Value (0x003D) + Value (0x003E)/1000
0x00F0	1	Reset the offset of the differential pressure	Write	Fixed value, 0xAA55
0x00F2	1	Reset accumulated or totalized flow rate	Write	Fixed value, 0x0001
0x00FF	1	Write protection of selected parameters	Write	Fixed value, 0xAA55

Note: The I²C address is set to bits 7 ~1, e.g., if the I²C address is 1 (0000 001x), the write address will be 0x02 (0000 0010) and the read address will be 0x03 (0000 0011).

5.6.1.4 CRC checksum calculation

The 8-bit CRC checksum transmitted after each two data bytes (int 16) is generated by a CRC algorithm. Its properties are listed in the table below. To calculate the checksum, only these two previously transmitted data bytes are used.

Property	Value
Name	CRC-8
Protected data	I²C read and write
Width	8 bits
Polynomial	0x07 (x8 + x2 + x + 1)
Initialization	0x00
Reflect input	False
Reflect output	False
Final XOR	0x00
Example	CRC(0x4E20) = 0x6D

5.6.2 RS485 Modbus communication protocol

The digital communication protocol is based on standard Modbus RTU Half-plex mode. A master (PC or PLC) can communicate with multiple slaves (the current product) for data exchange and configuration of communication parameters.

5.6.2.1 Hardware connection

The hardware layer is TIA/EIA-485-A, as illustrated below. In this configuration, the product (LF3000) is a slave.

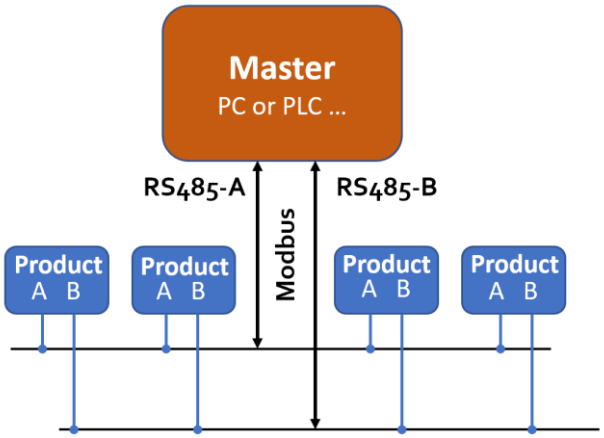

5.6.2.2 Communication parameters

The PC UART communication parameters are listed in the following table.

Parameters	Protocol
	RTU
Baud rate (Bits per second)	115200 bps
Start bits	1
Data bits	8
Stop bits	1
Even/Odd parity	None
Bits period	104.2 µsec
Bytes period	1.1458 msec
Maximum data length	20
Maximum nodes	247

5.6.2.3 Frame

The frame function is based on the standard Modbus RTU framing:

Start_bits	Address	Function codes	Data	CRC	Stop_bits
T1-T2-T3-T4	8 bit	8 bit	N 8 bit (20≥n≥0)	16 bit	T1-T2-T3-T4

Start_bits: 4 periods bit time, for a new frame.

Address: The address can be set from 1 to 247 except for 157 (0x9d).

Function codes: Define the product (LF3000)'s functions/actions (slaves), either execution or response.

Data: The address of the register, the length of data, and the data themselves.

CRC: CRC verification code. The low byte is followed by the high byte. For example, a 16-bit CRC is divided into BYTE_H and BYTE_L. In the framing, the BYTE_L will come first, followed by the BYTE_H. The last one is the STOP signal.

Stop_bits: 4 periods bit time, for ending the current frame.

5.6.2.4 Function codes

The Modbus function codes applied for the product are a subclass of the standard Modbus function codes. These codes are used to set or read the registers of the product:

Code	Name	Functions
0x03	Read register	Read register(s)
0x06	Set a single register	Write one single 16-bit register
0x10	Set multiple registers	Write multiple registers

5.6.2.5 Registers

The product (LF3000) has multiple registers available for the assignment of various functions. With these functions, the user can obtain data from products, such as product addresses and flow rates from the registers, or set product functions by writing the corresponding parameters.

The currently available registers are listed in the following table, and the registers may be customized upon contacting the manufacturer. Where R: read; W: write-only; W/R: read and write.

Note: At the time of shipping, the write protection function is enabled except for the address and baud rate. Once the user completes the register value change, the write protection will be automatically re-enabled to prevent incidental data loss.

Functions	Description	Register	Modbus reference
Address	Product address (R/W)	0x0081	40130 (0x0081)
Serial number	Serial number of the product	0x0030 ~ 0x0035	40049 (0x0030)
Flow rate	Instant flow rate (R)	0x003A ~ 0x003B	40059 (0x003A)
Accumulated flow	Accumulated or totalized flow rate (R)	0x003C ~ 0x003E	40061 (0x003C)
Offset calibration	Offset reset or calibration (W)	0x00F0	40241 (0x00F0)
Reset totalizer *	Reset accumulated or totalized flow rate (W)	0x00F2	40243 (0x00F2)
Write protection	Write protection of selected parameters (W)	0x00FF	40256 (0x00FF)

Notes: 1, R – Read-only, W – Write only, R/W – Read and write.

2. For the * marked functions, please disable the write protection before executing the command.

The detailed information of each register is described below: Y: enabled; N: disabled

Flowmeter address	**0x0081**	**Write**	Y
		Read	Y
Description	Address of the product		
Value type	UINT 16		
Notes	Values range from 1 to 247, excluding 157 (0x9d). Broadcast address 0 is not enabled.		

SN, Serial number	**0x0030 ~ 0x0035**	**Write**	N
		Read	Y
Description	Series Number of the product, SN		
Value type	ASCII		
Notes	SN= value(0x0030), value(0x0031),….,value (0x0035); **e.g.,** receiving 12 bits as: 0x2A47, 0x3741, 0x4549, 0x3032, 0x3035, 0x382A, the corresponding Serial Number is **G7AE102058**.		

Instant flow rate	**0x003A ~ 0x003B**	**Write**	N
		Read	Y
Description	Instant flow rate		
Value type	UINT 32		
Notes	Flow rate = [Value (0x003A)*65536 + value (0x003B)]/1000 **e.g.,** for a flow rate of 20.340 mL/min, the user will read "0" from register 0x003A and "20340" from register 0x003B, therefore Instant flow rate = (0*65536+20340)/1000 = 20.340		

Accumulated flow rate	0x003C ~ 0x003E	Write	N
		Read	Y
Description	Accumulated or totalized flow rate		
Value type	UINT 32 + UNIT 16		
Notes	Accumulated flow rate = Value (0x003C) * 65536 + Value (0x003D) + Value (0x003E)/1000 **e.g.,** for an accumulated flow rate of 3452.245 mL, the user will read "0 (0x0000)" from register 0x003C; "3452 (0x0D7C)" from register 0x003D, and "245 (0x00F5)" from register 0x003E. Then, the accumulated flow rate = 0 + 3425 + 245/1000 = 3425.245 mL.		

Offset calibration	0x00F0	Write	Y
		Read	N
Description	Reset or calibrate the offset.		
Value type	UINT 16, Fixed value 0xAA55		
Notes	To reset or calibrate the offset, write 0xAA55 to register 0x00F0. **Notes: When this function is being executed, make sure there is NO flow in the flow channel.**		

Reset the accumulated flow rate	0x00F2	Write	Y
		Read	N
Description	Reset the accumulated or totalized flow rate value.		
Value type	UINT 16, Fixed value 0x0001		
Notes	To reset the accumulated or totalized flow rate value, write 0x0001 to register 0x00F2. **Notes: Please disable the write protection before executing this command.**		

Write protection	0x00FF	Write	Y
		Read	N
Description	Write protection disabler for a set value to a specific register.		
Value type	UINT 16, Fixed value 0xAA55		
Notes	This function is enabled at the time of product shipment. To enable the write function of a specific parameter, such as GCF, the user needs to send 0xAA55 to the register 0x00FF, and then the write function will be enabled (write protection is disabled). After the write execution is completed, the firmware will automatically re-enable the write protection.		

6. Product selection

The product part number is composed of the product model number and suffixes, indicating the full-scale flow rate and the other parameters. Refer to the following for details.

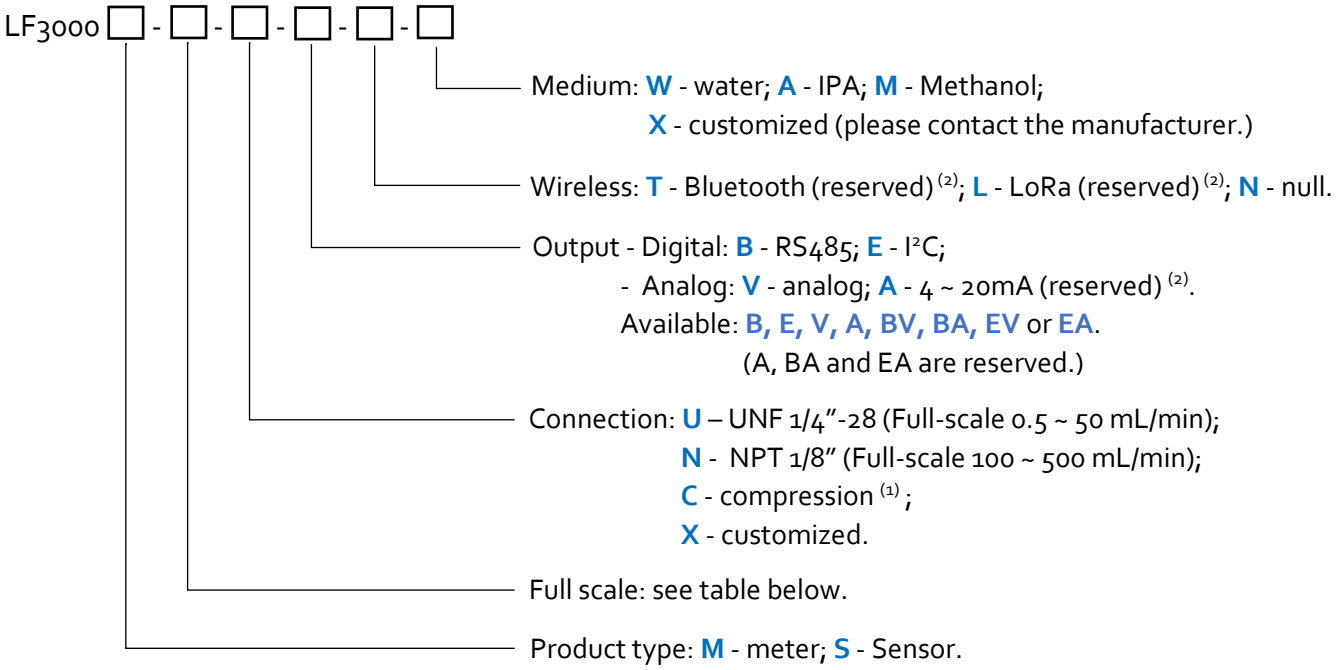

Note: (1) Compression fitting is for a soft tube with 1/4" OD.

(2) Please get in touch with the manufacturer for the reserved outputs.

Table 6.1: models and flow ranges

Full scale	Flow range	Wetted Materials	Notes
05	10 ... 500 µL/min	PPS, SiNx	
5	0.1 ... 5 mL/min	PPS, SiNx	
50	0.5 ... 50 mL/min	PEEK, SiNx	
100	1 ... 100 mL/min	PEEK, SiNx	
200	2 ... 200 mL/min	PEEK, SiNx	
500	5 ... 500 mL/min	PEEK, SiNx	

For example, LF3000M-50-U-B-T-W is a flow meter for 0.5 ~ 50 mL/min, with U – 1/4"-28 connector, RS485, Bluetooth, and applicable for water.

7. Technical specifications

All specifications listed in the following table, unless otherwise noted, apply for calibration conditions at 20°C and 101.325 kPa absolute pressure with de-ionized water. The product is horizontally mounted during calibration.

	Value		Unit
Full-scale flow range	500 µL/min, 5 mL/min	50, 100, 200, 500 mL/min	
Minimal flowrate	10		µL/min
Turn-down ratio	50:1	100:1	
Accuracy	±(2.0+0.5FS)		%
Response time	200 (others programmable)		msec
Working temperature	5 ~ 50		°C
Temperature effects	< 0.02		%/°C
Maximum pressure	0.8		MPa
Burst pressure	1.0		MPa
Dead volume	< 7.0		µL
Power supply	8 ~ 24		Vdc
Electrical interface	I^2C / 0.5 ~ 4.5 Vdc / RS485 / 4 ~ 20mA		
Wireless interface	Bluetooth / LoRa		
Display (meter only)	OLED, instant, and totalized flow rate		
Mechanical connection	UNF 1/4" -28 (Full-scale 0.5 ~ 50 mL/min); NPT 1/8" (Full-scale 100 ~ 500 mL/min); or customized		
Wetted materials	PEEK / SiNx or PPS / SiNx		
Reference conditions	20°C, 101.325 kPa, DI water		
Storage temperature	-10 ~ +70		°C
Weight	230 (meter); 75 (sensor)		Gram
Protection	IP67		
Fluid compatibility	Non-corrosive		
CE	EN61326-1; -2; -3		

*__Note:__ IO-Link is optional for the electrical interface.

8. Wetted materials and compatibility

The product flow channel is made of polyether ether ketone (PEEK). The sensing element comprises silicon, silicon nitride, and silicon dioxide. The sensor chip surfaces are passivated with silicon nitride and silicon dioxide. The electronic sealing is provided by LOCTITE Ablestik 84-3J. Another wetted material that may be exposed is FR-4.

9. Technical notes for the product performance

9.1 Measurement principle

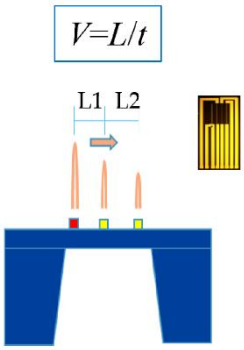

Figure 8.1: Measurement approach illustration.

The products utilize the Company's proprietary micro-machined (MEMS) thermal time-of-flight sensing technology. A thermal signal generator with a plurality of receivers is manufactured and separated at predefined micrometer distances on a chip surface with thermal isolation. When a fluid flows through the sensing chip, the fluid carries the modulated thermal signal downstream. The downstream receivers record a precise period of the fluid traveling from the generator to the receiver. The predefined distances and the measured period allow the sensor to register the fluid's precise flow speed in the sensing regime. The fluid flow rate can be determined by calibrating any mechanical alignment and other assembly-related factors.

The thermal time-of-flight sensing technology is particularly effective in metering the microfluidic flow, where the tiny channel makes it difficult for other flow measurement techniques to register the data. Please refer to the company's US patents and other publications made available to the public for additional information.

9.2 Precautions for the best performance of the product

9.2.1 Particle contamination

It is critical to have the measured fluid free of particle contamination. Since the fluidic channel is small, any particle's presence may create a deformed channel, leading to significant measurement errors. The particle deposition may also clog the channel, creating unstable flow and other instabilities, resulting in unpredictable measurement circumstances.

9.2.2 Presence of bubbles or cavitation

As the measurement principle is via thermal transportation, the presence of bubbles or cavitation shall significantly alter the thermal property of the fluid. In most cases, the bubble inclusion inside the fluid would lead to a negative measurement deviation. Therefore, it is recommended to flush the flow channel before the measurement if the presence of bubbles is suspected. A degasser is

highly recommended for testing. On the other hand, if the measurement's accuracy is in question, the channel could be first dried with a clean gas such as nitrogen and then flushed with degassed fluid before a new measurement.

9.2.3 Pressurized flow delivery

Although the product can withstand rated pressure, it is recommended to avoid abrupt changes in pressure within the flow channel, as these may cause pressure shock that could impact the electronics and control scheme, leading to system malfunction.

9.2.4 Continuous operation

It is recommended that the product be powered off when it is not in a measurement status. Constant power might risk overheating for the tiny channel, which may create small bubbles or other instability if such phenomena are observed. In such cases, power off the product and dry the system with a clean gas before reuse.

9.2.5 Measurement of non-conventional fluid

By default, the product is calibrated with de-ionized water; if another fluid is to be measured, there could be significant errors. If the product is to measure the clean water after foreign fluid has been passed or presented in the channel, purge the product with dry and clean gas such as nitrogen, and then flush the channel with de-ionized water before a new measurement.

The flow channel's wetted materials ensure it is inert to most conventional fluids, but precautions should be applied for any possible damage.

9.2.6 Product calibration

The product is calibrated with a high-precision reference syringe that is traceable to NIST standards. Additional verification with a high-precision balance of the system for calibration is also periodically performed. In typical operation, the product should maintain its status at the shipment. However, it is recommended that the product be recalibrated at least once a year for heavy usage.

9.2.7 Verification of the product's accuracy or reproducibility

Measurement reproducibility with the microfluidic sensors requires the consideration of the testing setups. The reference meter should have higher accuracy compared to the specified accuracy of the current product.

In the microfluidic regime, the surface tension or the Capillary number is the ratio between viscosity and capillary force. It plays a more critical role than the Reynolds number. The product has been uniquely designed to handle the surface tension variation in the flow channel. However, for the verification process, additional precautions should apply. The system is required to be cavitation-free, and fluid flow to be continuous; therefore, a degasser is strongly recommended during the verification process. If the continuous flow is guaranteed, Bernoulli's equation will still govern. There should not be any sections in the system that will create a substantial pressure difference. Otherwise, the measured flow speed differences will be inevitable.

10. Troubleshooting

Phenomena	Possible causes	Actions
No signal/display	Power not connected	Connect the power, and check the cable.
	Cable connection incorrect	Check the cable.
	No flow or clogging	Check flow and cavitation.
	Power regulator failure	Return to the factory.
	Sensor failure	Return to the factory.
Significant errors or unexpected flow rate	Bubbles, clogging, and fluid type.	Check the system, dry it, and then flush.
Erroneous or large noise	Vibration, unstable flow	Check the system.
Offset unstable	Vibration, overheating	Check the system, and power off.
No digital interface	Wrong address, software	Check the commands and connection.
No wireless, and BT cannot pair.	Wrong model, data jam	Check the model, and power off/on.

11. Warranty and Liability

(Effective January 2018)

Siargo warrants that the products sold hereunder will be used appropriately and installed correctly under normal circumstances and service conditions. As described in this user manual, it shall be free from faulty materials or workmanship for 180 days for OEM products and 365 days for non-OEM products from the date of shipment. This warranty period is inclusive of any statutory warranty. Any repair or replacement of a serviced product shall bear the same terms in this warranty.

Siargo makes no warranty, representation, or guarantee and shall not assume any liability regarding the suitability of the products described in this manual for any purposes that are not specified in this manual. The users shall be held fully responsible for validating the performance and suitability of the products for their particular design and applications. For any misuse of the products out of the scope described herein, the user shall indemnify and hold Siargo and its officers, employees, subsidiaries, affiliates, and sales channels harmless against all claims, costs, damages, and expenses or reasonable attorney fees from direct or indirect sources.

Siargo makes no other warranty, express or implied, and assumes no liability for any special or incidental damage or charges, including but not limited to any damages or charges due to installation, dismantling, reinstallation, etc., or any other consequential or indirect damages of any kind. To the extent permitted by law, the exclusive remedy of the user or purchaser, and the limit of Siargo's liability for any and all losses, injuries, or damages concerning the products, including claims based on contract, negligence, tort, strict liability, or otherwise shall be the return of products to Siargo, and upon verification of Siargo to prove to be defective, at its sole option, to refund, repair or replacement of the products. Regardless of form, no action may be brought against Siargo more than 365 days after a cause of action has accrued. The products returned under warranty to Siargo shall be at the user or purchaser's risk of loss and will be returned, if at all, at Siargo's risk of loss. Purchasers or users are deemed to have accepted this limitation of warranty and liability, which contains the complete and exclusive limited warranty of Siargo. It shall not be amended, modified, or its terms waived except by Siargo's sole action.

This manual's product information is believed to be accurate and reliable at the time of release or when made available to the users. However, Siargo shall assume no responsibility for any inaccuracies and/or errors and reserves the right to make changes without further notice for the relevant information herein.

This warranty is subject to the following exclusions:

(1) Products that have been altered, modified, or have been subject to unusual physical or electrical circumstances, as indicated, but not limited to those stated in this document or any other actions which cannot be deemed as proper use of the products;

(2) Products that have been subject to chemical attacks, including exposure to corrosive substances or contaminants. In the case of battery usage, long-term discharge, or leakage-induced damage;
(3) Products that have been opened or dismantled for whatever reason;
(4) Products that have been subject to working conditions beyond the technical specification as described by this manual or related datasheet published by the manufacturer;
(5) Any damages incurred by the incorrect usage of the products;
(6) Siargo does not provide any warranty on finished goods manufactured by others. Only the original manufacturer's warranty applies.
(7) Products that unauthorized dealers or any third parties resell.

12. Service contact and information

Siargo Ltd. is making every effort to ensure the quality of its products. In case of questions and or product support, please get in touch with customer service at the address listed below. We will respond to your request in a timely fashion and work with you toward your complete satisfaction.

Customer service and all orders should be addressed to

Siargo Ltd.
4677 Old Ironsides Drive, Suite 310,
Santa Clara, California 95054-1857, USA
Tel: +1(408)969-0368
Email: Info@Siargo.com

For orders, please provide an accurate and complete postal address. Siargo will not ship to P.O. Boxes or via a third party.

Please get in touch with info@siargo.com to obtain a Return Materials Authorization (RMA) before returning the product to the factory for repairs or services, including calibration. Please specify in your email message the product's status that you intend to ship back to the factory as clearly and as detailed as possible. Be sure to write the RMA on the returned package or include a letter with the RMA information.

For further information and updates, please visit www.Siargo.com.

Appendix I: Product evaluation kit

Siargo offers a sensor evaluation kit, including a digital data converter, USB data cable, and User Application software, that allows the user to evaluate the product performance on a Microsoft Windows-based computer. The user can read and visualize the flow rate of the product, obtain the totalized values, and save the data for further analysis. It can read from up to 128 sensors with the I^2C interface in serial.

For further information and the purchase of the evaluation kit, please get in touch with the manufacturer or the sales representative.

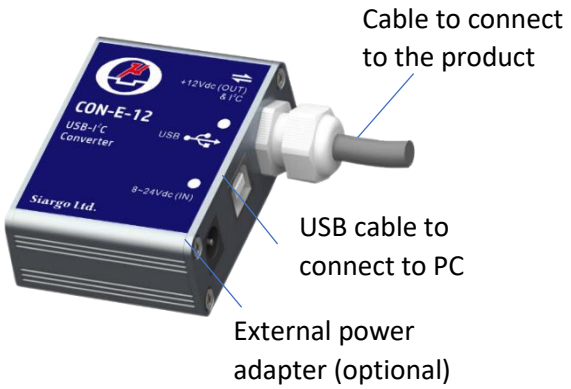

Each converter comes with a fixed cable to be directly connected to the product, as well as a USB cable for connection to the PC.

For most products, the power from the PC via the USB cable will be sufficient to power the sensor product. No external power will be required. However, for multiple sensors in serial, the power via the USB cable may not be enough. An external power adapter with 8~24Vdc will be necessary.

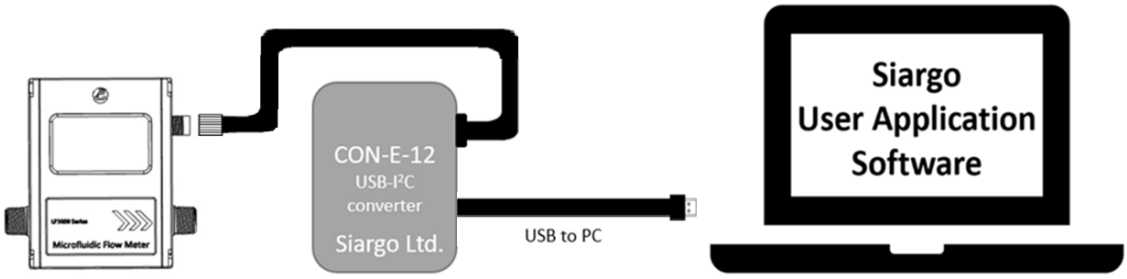

Appendix II: Document history

Revision VA.3.04 (August 2025)

- Corrections.

Revision VA.3.03 (February 2025)

- Product selection corrections.

Revision VA.3.02 (September 2024)

- Corrections.

Revision VA.3.01 (April 2024)

- Corrections.

evision VA.3 (June 2023)

- Updated RS485 communication protocols;
- Added connectors for flow rates 100ccm and higher;
- Enhanced wetted material descriptions;
- Update contact address.

Revision VA.2 (February 2023)

- Corrections.

Revision VA.1 (December 2022)

- Revised product selection;
- Corrections.

Revision VA.0 (October 2022)

- First release.