Siargo Ltd.



Gas Mass Flow Meter VB.4

Model MF4600

© 2025 Siargo Ltd.

www.Siargo.com

Gas Mass Flow Meter

with MEMS calorimetric sensing technology

MF4600 Series

User Manual

Document No.	12-2025-CM1 EN
Issue date	2025.12
Revision	VB.4

Siargo Ltd.

4677 Old Ironsides Drive, Suite 310,
Santa Clara, California 95054-1857,
USA

Tel: +1(408)969-0368
Email: Info@Siargo.com

© Copyright 2025 by Siargo Ltd.
Siargo Ltd. and its subsidiaries reserve the right to change the specifications and/or descriptions without prior notice. For further information and updates, please visit: www.Siargo.com

Attention!

- Please carefully read this manual before operating this product.
- Do not open or modify any hardware that may lead to irrecoverable damage.
- Do not use this product if you suspect any malfunctions or defects.
- Do not use this product for corrosive media or in a strong vibrational environment.
- Use this product according to the specified parameters.
- Only the trained or qualified personnel shall be allowed to perform product services.

Use with caution!

- Be cautious of electrical safety, even if it operates at a low voltage; any electrical shock might lead to some unexpected damage.
- The gas to be measured should be clean and free of particles. Do not apply this meter to a liquid medium.
- Do not apply for any unknown or non-specified gases that may damage the product.
- For remote data, please be sure the meter is configured correctly.

Table of Contents

1. Overview 5
2. Receipt / unpack of the products 6
3. Knowing the products 7
   3.1 Product description 7
   3.2 Power and data cable description 7
   3.3 Mechanical dimensions 8
4. Installation 9
5. Operation and MENU description 11
   5.1 Check the product specifications 11
   5.2 Check the leakage 11
   5.3 Power the meter and digital data connection 11
   5.4 Meter display and MENU descriptions 12
      5.4.1 Meter display and function keys 12
      5.4.2 MENU function input sequence 12
      5.4.3 Detailed descriptions of the functions 15
   5.5 RS485 Modbus communication protocol 17
      5.5.1 Hardware connection 17
      5.5.2 Communication parameters 18
      5.5.3 Frame 18
      5.5.4 Function codes 19
      5.5.5 Registers 19
   5.6 Analog output (0.5 ~ 4.5 Vdc) 22
   5.7 Pressure loss 22
6. Product selection 24
7. Technical specifications 26
8. Wetted materials and compatibility 27

9. Technical notes for the product performance 28
9.1 Measurement principle 28
9.2 Precautions for the best performance of the product 28
9.2.1 Comparison with a third-party reference meter 28
9.2.2 Control flow with a manual valve 29
9.2.3 Particle contamination and fluidic cleanness 29
9.2.4 Apply to a different gas medium 29
10. Troubleshooting 30
11. Warranty and Liability 31
12. Service/order contact and other information 33
Appendix I: Product evaluation kit 34
Appendix II: Document history 35

1. Overview

All contact information can be found at the end of this manual.

This manual provides essential information for the operation of the MF4600 series of gas mass flow meters with a manual control valve for general-purpose gas flow monitor and control applications. The product performance, maintenance, and troubleshooting, as well as the information for product order, technical support, and repair, are also included.

MF4600 mass flow meters are designed for general-purpose, precise industrial gas processing monitoring or control. It can be used to replace the mechanical rotameters where digital data and/or remote control are required. The meter series covers a wide dynamic flow range with a working pressure rating of up to 1.0 MPa, and a temperature ranging from -10 to 55°C.

The meters are operated with Siargo's proprietary MEMS calorimetric mass flow sensors together with smart control electronics. The sensor surface is passivated with silicon nitride ceramic materials together with water/oilproof nano-coating for performance and reliability. The meter body is made of either aluminum alloy or stainless steel, which is available for applications of most gases.

2. Receipt / unpack of the products

Upon receipt of the products, please check the packing box before dismantling the packing materials. Ensure no damage during shipping. If any abnormality is observed, please contact and notify the carrier who shipped the product, and inform the distributors or sales representatives if the order is not placed directly with the manufacturer; otherwise, the manufacturer should be notified as well. For any further actions, please refer to the return and repair section in this manual.

If the packing box is intact, open it to find the product (either the meter or the meter with the valve, as specified in the actual order). The power adapter and/or data cable, as shown below, may also be found according to your exact order.



Figure 2.1: MF4600 flow meter



Figure 2.2: data cable

Please check immediately for the integrity of the product as well as the power and data cable. If any abnormalities are identified, please notify the distributor/sales representative or manufacturer as soon as you can. If any defects are confirmed, an exchange shall be arranged immediately via the original sales channel. (Note: the LED display shall not be lighted until the power cable is plugged in.) This user manual shall also either be included in the packing box or be available via an online request for an electronic version. In most cases, this manual shall be made available to the customer before the actual order.

The standard cable has an AMPMODU MTE (5 positions) compatible connector with a length of 0.5 meters.

3. Knowing the products

3.1 Product description

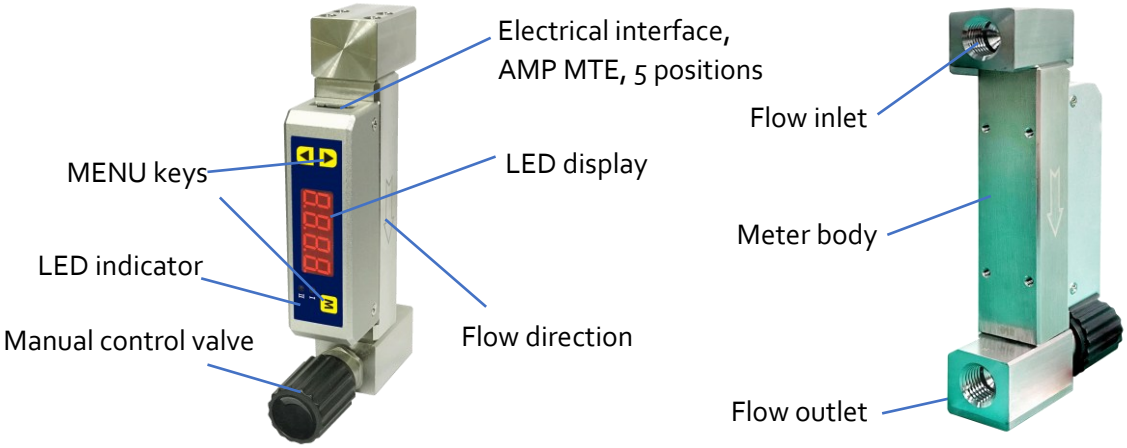

Figure 3.1: MF4600 parts description

3.2 Power and data cable description

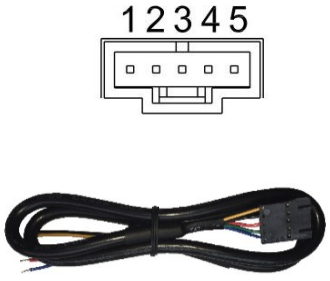

Figure 3.2: MF4600 connection and cable

Table 3.1: MF4600 pin/wire assignments.

Wire	Color	Definition
1	Blue	RS485B (-)
2	Green	Analog output 4 ~ 20 mA /Analog output 0.5 ~ 4.5 Vdc
3	Red	Power supply, 8 ~ 24 Vdc
4	Black	Ground
5	Yellow	RS485A (+)

The standard cable has an AMPMODU MTE (5 positions) compatible connector with a length of 0.5 meters.

3.3 Mechanical dimensions

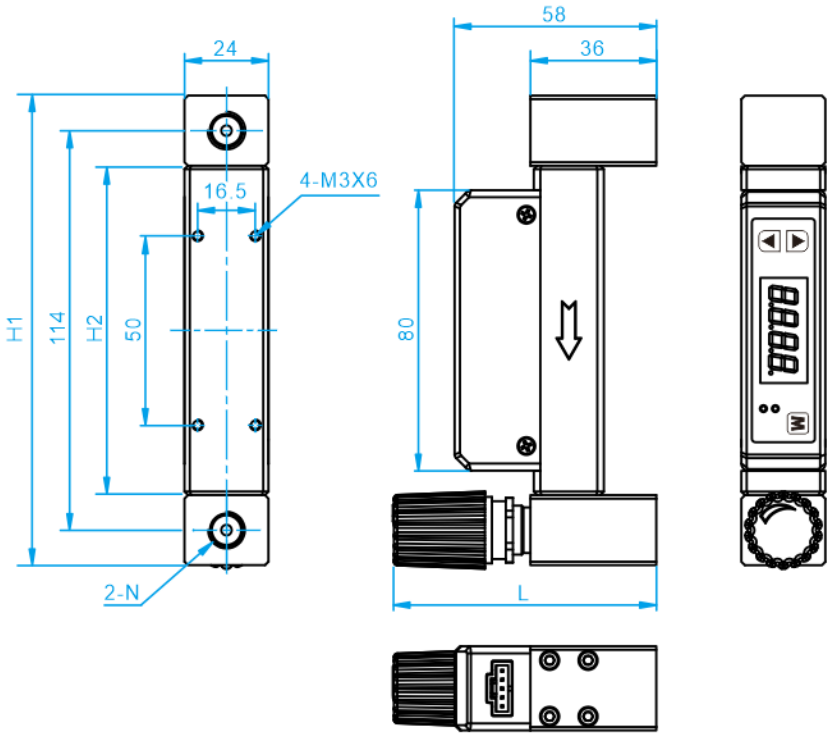

Figure 3.3: MF4600 dimensions

Model	DN (mm)	N *	L**	H1	H2
MF4601	1.0	NPT 1/8" ~ 1/4" BSPT 1/8" ~ 1/4"	88	138	90
MF4602	2.0	NPT 1/8" ~ 1/4" BSPT 1/8" ~ 1/4"	73 ~ 80	134	94
MF4603	3.0	NPT 1/8" ~ 1/4" BSPT 1/8" ~ 1/4"	73 ~ 80	134	94
MF4608	8.0	NPT 1/4" ~ 3/8" BSPT 1/4" ~ 3/8"	73 ~ 80	138	90

Note: * Other threads can be customized. For a barbed connection, please use a converter.

** The range is from valve closed to valve fully open.

4. Installation

Do not open or alter any part of the product that would lead to malfunction and irrecoverable damage. It will also forfeit the terms of the warranty and cause liability.

The product at the time of shipment is fully inspected for its quality and meets all safety requirements. Additional safety measures during the installation should be applied. This includes, but is not limited to, the leakage verification procedures, standard EDS (electrostatic discharge) precautions, and DC voltage precautions. Other tasks, such as calibration, part replacement, repair, and maintenance, must only be performed by trained personnel. Upon request, the manufacturer will provide necessary technical support and/or training for the personnel.

There are no preferred directions for the installation. The flow direction should be aligned with the arrow mark on the meter body. If the flowing fluid may have particles or debris, a filter is strongly recommended to be installed upstream of the meter.

Please follow the following steps to complete the installation:

a) Upon opening the package, the product's physical integrity should be inspected to ensure no visual damage.

b) Before installation of the product, please ensure that the pipe is free from debris, particles, or any other foreign materials.

c) Close the meter valve completely.

d) During installation, please make sure no foreign materials (such as water, oil, dirt, particles, etc.) enter the installation pipeline.

e) Connect electrical wires per the wire definition in Table 3.1. Please be sure of the power supply range (i.e., 8 ~ 24 Vdc) and power supply polarization. If an adapter is other than the one supplied by the manufacturer, make sure the adapter meets industrial standards and has all safety certifications.

f) For the data communication wire connection, please follow the description in Table 3.1 and make sure that the wires are correctly connected to the proper ports on your data device/equipment. Please make sure the data cable meets industrial standards with appropriate shielding.

g) Once the external power is successfully connected, the LED should be lit up with the proper information displayed.

h) Slowly open the valve(s) of the gas supply, if any, upstream or downstream, or both of the pipeline. Next, slowly open the valve of the meter, and it should start to measure the flow in the pipeline. Note: because the meter has an extensive dynamic measurement range, it could be normal if you see a small instant flow rate even if there is no flow in the pipeline. If the value is

consistently present, double-check the pipe leakage and then reset the offset if you are sure there is no leakage or flow.

h) This will conclude the installation.



Cautions

a) Don't alter any parts of the product.

b) Ensure the electrical connection is properly done per the instructions.

c) Make sure no mechanical stresses in the connections.

d) The strong electromagnetic interference sources close by or any mechanical shocks at the pipeline may also create malfunctioning of the product.

e) Slowly open/close valves to prevent abrupt pulse flow impact.

5. Operation and MENU description

5.1 Check the product specifications

Before starting to use this product, check the product specifications that can be found in this manual or the basic information from the datasheet on the company's website www.Siargo.com.

The detailed product technical specifications can be found in Section 7. For a specific application, the pressure rating must not be higher than the system pressure to be measured, and the flow range should also be within the specified range. In most cases, the use of a high full-scale range meter for the very low flow rate measurement often results in erroneous data. The gas to be measured must also be consistent with that specified by the product. Be particularly cautious about the supplied voltage indicated in the specification. A higher voltage may lead to irrecoverable damage, and a lower voltage will not power the product for any desired functions.

For optimal product performance, it is recommended that the gas to be measured be clean and free of particles or other foreign materials.

5.2 Check the leakage

Check gas leakage before any measurement. If necessary, pressurized nitrogen or air can be used for the leakage check.

5.3 Power the meter and digital data connection

Although this product complies with the CE-required EMC regulations, it also requires the product to be used according to the standard electrical device practice. Before connecting the meter with external DC power or an AC-DC adapter, make sure the supply voltage is within the range specified in Section 7. Be cautious that standard electrical device precautions, such as ESD (electrostatic discharge) and DC voltage, are observed. Excessive electrostatic discharge may damage the product.

The manufacturer-supplied power and data cable has a locking fixture. Lock the cable and ensure it is properly engaged to prevent accidental unplugging.

Half-duplex RS485 Modbus is used for digital data communication. Make sure the wires are properly connected to the receiver side.

5.4 Meter display and MENU descriptions

5.4.1 Meter display and function keys



Figure 5.1: MF4600 display and function keys

The meter features a front 3-key board, allowing users to set desired functions, access data, and check the status. The Menu key (M) is located in a convenient position, allowing users to select functions and perform confirmation or other related actions, as detailed in the MENU key sequence graphic presentation. Two keys ("Up" and "Down") are used to select the functions. The two LED lights (I and II) are used for the indication of display contents. For the default instant flow rate display, both of these two LEDs will be off. Please refer to the detailed information below.

The default instant flow rate is SLPM with four digits, one of which is a decimal. When the flow rate exceeds the specified range, LED I will flash for rates above the upper limit, and LED II will flash for rates below the lower limit. If both LEDs are flashing, the displayed values are incorrect.

Once the power is supplied and no abnormal issues are observed, the meter is ready to perform the measurements. While the LED displays the instant mass flow rate, the accumulated or totalized flow rate can be accessed by pressing the "Up" or "Down" key. The accumulated flow rate is registered in "standard liter" (SL), with a maximum capacity of 99,999,999 SL. The first four digits of the accumulated flow rate are indicated by the "I" LED light, and the last four digits are represented when the "II" LED light is on. The "I" and "II" LED lights will be automatically switched when the accumulated flow rate is displayed. The accumulated flow rate will be automatically saved every three minutes. At the time of the power failure or cut-off, the value will represent the latest saved ones.

5.4.2 MENU function input sequence

At the flow measurement (primary) display, press the three MEMU keys, which will allow the user to perform a variety of settings of the product. The following graph details the key sequence for each function, and some detailed explanations follow the graphic presentation.

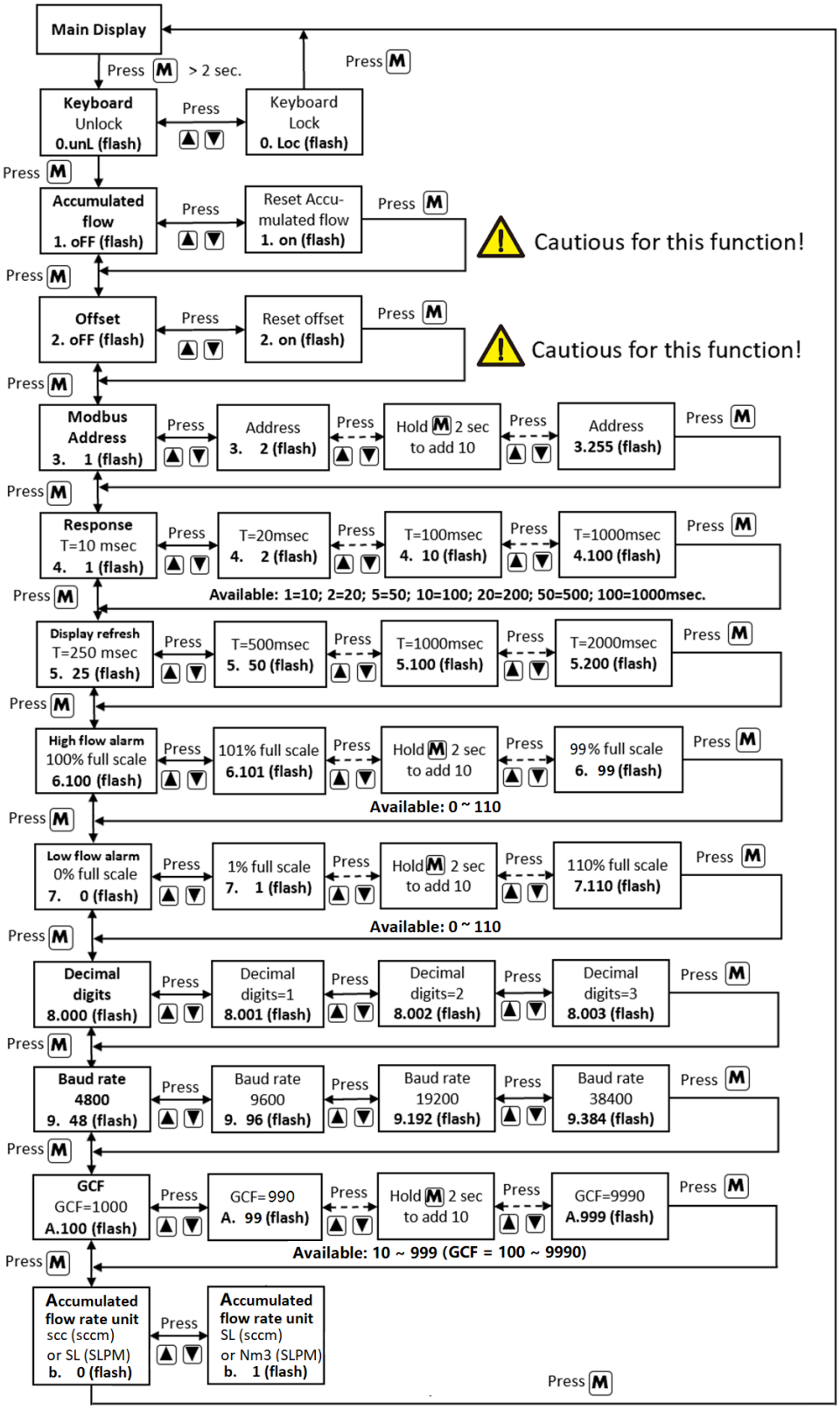

Figure 5.2: MF4600 menu flow chart

Table 5.1: On-screen characters and their corresponding functions

On-screen character	Symbol	Functions
	0.unL / Loc	Unlock/lock the keyboard.
	1.oFF / on	Reset the accumulated flow.
	2.oFF / on	Reset or calibrate the offset.
	3. 1 ... 247	Set the Modbus address Available: 1 ~ 247, The default address is 1.
	4. 1 / 2 / 5 / 10 / 20 / 50 / 100	Set the response time
	5. 25 / 50 / 100 / 200	Set the display refresh rate.
	6. 0 ... 110	Set the upper flow rate alarm **Available:** 0 ~ 110, meaning 0% ~ 110% of % full scale. The default value is 100 (100% full scale).
	7. 0 ... 110	Set the lower flow rate alarm **Available:** 0 ~ 110, meaning 0% ~ 110% of % full scale. The default value is 0 (0% full scale).
	8. 0 / 1 / 2 / 3	Set the display decimal.
	9. 48/ 96/192/384	Set the communication baud rate **Available baud rates:** 4800, 9600, 19200, 38400. The default value is 384 (baud rate 38400).
	A. 10 ... 999	Set the GCF (the gas conversion factor) **Available:** 10 ~ 999, means of GCF = 100 ~ 9990. The default value is 100, which means GCF = 1000.
	b. 0 / 1	Set the accumulated flow rate unit. ➢ scc or SL (instant flow rate unit is sccm); ➢ SL or Nm^3 (instant flow rate unit is SLPM).

Note: During this process, the meter will continue to measure the flow without being interrupted.

5.4.3 Detailed descriptions of the functions

0) Keyboard security

This function allows the user to disable the keyboard entry after the meter is set as desired. It will prevent any accidental key entry that may alter the settings. At the MENU, select "lock" to lock the keyboard.

1) Reset the accumulated flow rate

The maximum accumulated flow rate that can be registered by the meter is 99,999,999 SL. Once the value is reached, the accumulating function will stop processing the data. It is necessary to reset the register to continue this function.

Use this function with caution, as it will delete all current accumulated flow rate data.

2) Reset or calibrate the offset

Sometimes, or after a long time of use (i.e., over 1 year of usage), the sensor surface could have a thin deposit from the environment if the gas is not super clean. Depending on the actual case, this deposit might or might slightly change the thermal sensitivity of the sensor, resulting in a drift of the offset or a tiny flow at the zero flow in the pipeline. Using this function to reset the offset will not have an impact on the meter performance if such an offset is outside of the 100:1 calibrated range.

Use this function with caution, ensuring there is no flow when executing it; otherwise, it may incur additional errors in the measurement.

3) Set the Modbus address of the meter

Use this function to set the RS485 Modbus address of the meter. This setting can also be done via the RS485 communication.

4) Set the response time

Use this function to change the response time of the meter. The default one is 10 milliseconds. Increasing the response time will allow more data to average and output a stable flow rate if the actual flow rate may have some undesired fluctuation.

Available response time is 10 msec (4. 1); 20 msec (4. 2); 50 msec (4. 5); 100 msec (4. 10); 200 msec (4. 20); 500 msec (4. 50), and 1000 msec (4.100)

5) Set the display refresh rate

Changing the display refresh rate will alter the display update time; it will have no impact on the meter's measurement. The default refresh rate is 250 msec.

Available refresh rates are 250 msec (5. 25); 500 msec (5. 50); 1000 msec (5.100), and 2000 msec (5.200).

6) Set the upper flow rate alarm

This function allows the user to set a maximum allowable flow rate above which an alarm will be triggered with a flashing screen.

7) Set the lower flow rate alarm

This function allows the user to set a minimum flow rate below which an alarm will be triggered with a flashing screen.

8) Set the display decimal

The user can use this function to alter the default one-decimal display. Options are listed below for each flow range:

Table 5.2: decimal options

Flow range	Decimal options
0 ~ 100, 200, 500 sccm	0, 1
0 ~ 1000 sccm	0
0 ~ 1, 2, 5 SLPM	0, 1, 2, 3
0 ~ 10, 20, 50 SLPM	0, 1, 2
0 ~ 100 SLPM	0, 1

9) Set the communication baud rate

This function allows a MENU entry of the RS485 communication baud rate.

10) Set the GCF (the gas conversion factor)

The meter is usually calibrated with air at 20°C and 101.325 kPa. When the user wants to set the standard conditions other than the specified temperature or applies the meter for other

allowable gases (please get in touch with the manufacturer for the list of gases), it is possible to use this gas conversion factor function to ensure the readings are correct and desired.

The default value of the GCF is 1000 (1.000). For example, if one wants to alter the standard temperature to 0°C, the factor can be calculated using the gas equation: PV/T = constant:

GCF = 1000 x V(new) / V (20°C) = T (0°C) / T (20°C) = 1000 x 273 / 293 = 932

Then the gas conversion factor would be 932.

In some cases, the actual system may have a constant deviation from that at the calibration; this GCF can also be used to adjust. For additional information, please get in touch with the manufacturer.

11) Set the accumulated flow rate unit.

When the instant flow rate unit is sccm, the accumulated flow rate unit can be set to scc or SL.

When the instant flow rate unit is SLPM, the accumulated flow rate unit can be set to SL or Nm^3.

5.5 RS485 Modbus communication protocol

The digital communication protocol is based on the standard Modbus RTU Half-plex mode communication protocol. A master (PC or PLC) can communicate with multiple slaves (the current product) for data exchange and configuration of communication parameters. Refer to Table 3.1 for the cable connection.

5.5.1 Hardware connection

The RS485 hardware layer is TIA/EIA-485-A, as illustrated below. In this configuration, the product (MF4600) is a slave.

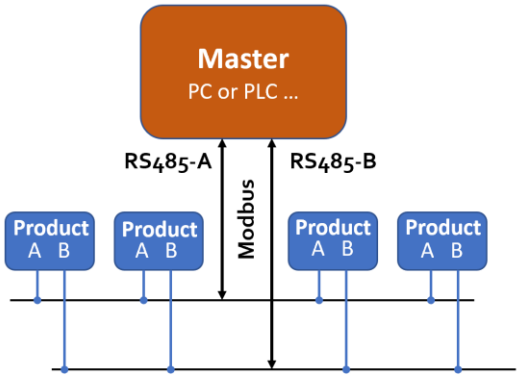

Figure 5.3: RS485 hardware

5.5.2 Communication parameters

The PC UART communication parameters are listed in Table 5.3.

Table 5.3: PC UART communication parameters

Parameters	Protocol
	RTU
Baud rate (Bits per second)	38400 bps
Start bits	1
Data bits	8
Stop bits	1
Even/Odd parity	None
Bits period	104.2 µsec
Bytes period	1.1458 msec
Maximum data length	20
Maximum nodes	247

5.5.3 Frame

The frame function is based on the standard Modbus RTU framing:

Table 5.4: frame function

Start_bits	Address	Function codes	Data	CRC	Stop_bits
T1-T2-T3-T4	8 bit	8 bit	N 8 bit (20≥n≥0)	16 bit	T1-T2-T3-T4

Start_bits: 4 periods bit time, for a new frame.

Address: The address can be set from 1 to 247 except for 157 (0x9d). 0 is the broadcast address.

Function codes: Define the product (MF4600)'s functions/actions (slaves), either execution or response.

Data: The address of the register, the length of data, and the data themselves.

CRC: CRC verification code. The low byte is followed by the high byte. For example, a 16-bit CRC is divided into BYTE_H and BYTE_L. In the framing, the BYTE_L will come first, followed by the BYTE_H. The last one is the STOP signal.

Stop_bits: 4 periods bit time, for ending the current frame.

5.5.4 Function codes

The Modbus function codes applied for the product are a subclass of the standard Modbus function codes. These codes are used to set or read the registers of the product:

Table 5.5: function codes

Code	Name	Functions
0x03	Read register	Read register(s)
0x06	Set a single register	Write one single 16-bit register
0x10	Set multiple registers	Write multiple registers

5.5.5 Registers

The product (MF4600) has multiple registers available for the assignment of the various functions. With these functions, the user can obtain data from products, such as product addresses and flow rates from the registers, or set product functions by writing the corresponding parameters.

The currently available registers are listed in the following table, and the registers may be customized upon contacting the manufacturer. Where R: read; W: write-only; W/R: read and write.

Note: At the time of shipping, the write protection function is enabled except for the address and baud rate. Once the user completes the register value change, the write protection will be automatically re-enabled to prevent incidental data loss.

Table 5.6: Registers

Functions	Description	Register	Modbus reference
Address	Product address (R/W)	0x0001	40002 (0x0001)
Flow rate	Current flow rate (R)	0x0002 ~ 0x0003	40003 (0x0003)
Totalizer	Totalizer or accumulated flow rate (R)	0x0004 ~ 0x0006	40005 (0x0005)
Baud rate	Communication baud rate (R/W)	0x0015	40022 (0x0015)
Gas conversion factor	Gas conversion factor (R/W)	0x0016	40023 (0x0016)
Response time	Response time or sampling time (R/W)	0x0017	40024 (0x0017)
Offset reset	Reset or calibrate offset (W)	0x0027	40040 (0x0027)
High flow alarm	Set high flow rate alarm (R/W)	0x0031	40050 (0x0031)
Low flow alarm	Set low flow rate alarm (R/W)	0x0033	40052 (0x0033)
Write protect	Disable a specific parameter entry (W)	0x0014	40021 (0x0014)

The detailed information of each register is described below: Y: enabled; N: disabled.

Address	**0x0001**	**Write**	Y
		Read	Y
Description	Address of the product		
Value type	UINT 16		
Notes	Values range from 1 to 247, excluding 157 (0x9d). The broadcast address is not enabled; the default address is 1.		

Flow rate	**0x0002 ~ 0x0003**	**Write**	N
		Read	Y
Description	Current flow rate		
Value type	UINT 32		
Notes	Flow rate = [Value (0x0002)*65536 + value (0x0003)]/1000 e.g., for a flow rate of 123.456 SLPM, the user will read "1 (0x0001)" from register 0x0002 and "57920 (0xE240)" from register 0x0003, therefore Current flow rate = (1*65536+57920)/1000 = 123.456		

Totalizer	**0x0004 ~ 0x0006**	**Write**	Y
		Read	Y
Description	Totalizer or accumulated flow rate		
Value type	UINT 32 + UINT 16		
Notes	A1 = Value (0x0004) * 65536 + Value (0x0005) A2 = Value (0x0006) Totalizer or accumulated flow rate = (A1 * 1000 + A2)/1000 For a totalizer or accumulated flow rate of 3452.245 m3, the user will read "0 (0x0000)" from register 0x0004; "3452(0x0D7C)" from register 0x0005, and "245(0x00F5)" from register 0x0006. Then, the totalizer or accumulated flow rate = ((0 + 3452)*1000 + 245)/1000=3452.245.		

Baud rate	**0x0015**	**Write**	Y
		Read	Y
Description	Communication baud rate		
Value type	UINT 16		
Notes	Value=0: 4800; 1: 9600; 2: 19200; 3: 38400. The default value is 3.		

Response time	**0x0017**	**Write**	Y
		Read	Y
Description	Meter response or data sampling time		
Value type	UINT 16		
Notes	The default value is 10 (10 msec). Options are 10, 20, 50, 100, and 200 msec. **It is recommended that write protection be applied after this value is changed.**		

Gas conversion factor	0x0016	Write	Y
		Read	Y
Description	Gas conversion factor		
Value type	UINT 16		
Notes	The value is 1000 times the calculated value. The value is used to change the reference conditions, adjust the system deviation, and calibrate for different gases. **It is recommended that write protection be applied after this value is changed.**		

High flow alarm	0x0031 ~ 0x0032	Write	Y
		Read	Y
Description	Set the high flow rate alarm limit.		
Value type	UINT 16		
Notes	The set flow rate value = ((0x0031)*65536+(0x0032))/1000		

Low flow alarm	0x0033 ~ 0x0034	Write	Y
		Read	Y
Description	Set the low flow rate alarm limit.		
Value type	UINT 16		
Notes	The set flow rate value = ((0x0033)*65536+(0x0034))/1000		

Offset reset	0x0027	Write	Y
		Read	N
Description	Reset or calibrate the offset.		
Value type	UINT 16, fixed value 0xAA55		
Notes	Send the fixed value 0xAA55 to register 0x0027. **Please make sure there is no flow before executing this command.**		

Write protection	0x0014	Write	Y
		Read	N
Description	Writ.e protection of a specific value		
Value type	UINT 16, a fixed value of 0xAA55		
Notes	This function disables the write-protected register and allows you to modify the corresponding register's value. For example, to change the gas conversion factor, the user needs to send 0xAA55 to the register 0x0016, and then the write function will be enabled (write protection is disabled). After the write execution is completed, the firmware will automatically re-enable the write protection.		

5.6 Analog output (0.5 ~ 4.5 Vdc)

The product offers a voltage analog output of the instant flow rate. Refer to Table 3.2 for the wire connection for this output. The meter is calibrated to 110% of the specified full-scale flow rate. The typical analog output is indicated below. This over-range applies to both analog and digital output.

Table 5.7: MF4600 analog output

Flow rate	Analog output (Vdc)
0.00	0.50
10 % F.S.	0.90
20 % F.S.	1.30
40 % F.S.	2.10
50 % F.S.	2.50
70 % F.S.	3.30
90 % F.S.	4.10
100 % F.S.	4.50
110 % F.S.	4.90
120 % F.S.	4.90

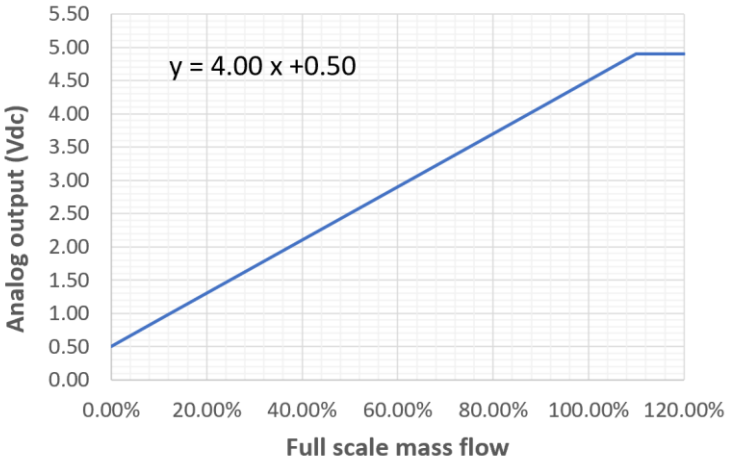

Figure 5.4: MF4600 analog output

5.7 Pressure loss

The product is designed for low-pressure loss. The significant drop in pressure is at the manual valve structure. The following graph illustrates the pressure losses of the selected models.

Table 5.8: MF4602 pressure loss

Flow rate (sccm)	Pressure loss (Pa)
0.0	**0**
200.0	**170**
400.0	**420**
500.0	**590**
600.0	**770**
800.0	**1220**
1000.0	**1750**

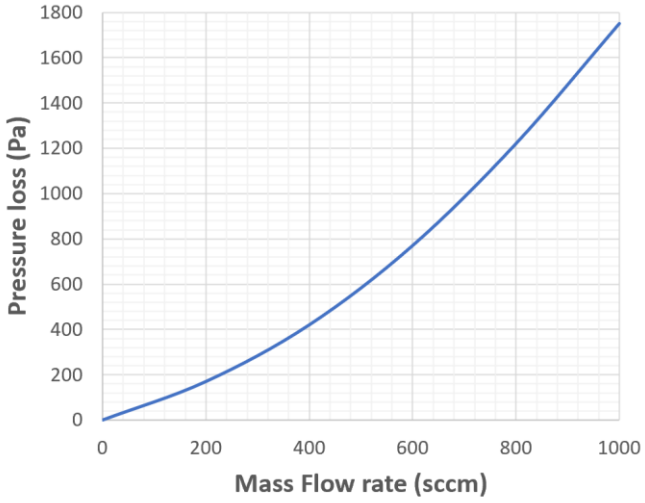

Figure 5.5: MF4602 pressure loss

Table 5.9: MF4603 pressure loss

Flow rate (SLPM)	Pressure loss (kPa)
0.0	**0**
1.0	**0.4**
2.0	**1.2**
3.0	**2.4**
4.0	**4.2**
4.5	**5.4**
5.0	**6.5**

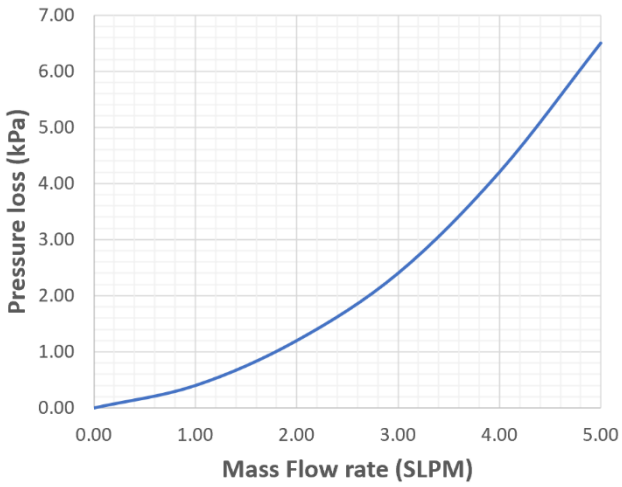

Figure 5.6: MF4603 pressure loss

Table 5.10: MF4608 pressure loss

Flow rate (SLPM)	Pressure loss (kPa)
0.0	**0**
10.0	**2.0**
20.0	**7.8**
30.0	**17.5**
40.0	**35.0**
45.0	**46.0**
50.0	**57.5**

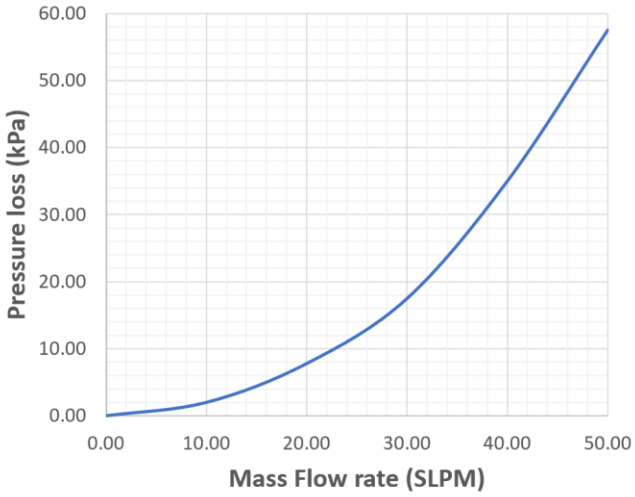

Figure 5.7: MF4608 pressure loss

6. Product selection

The product part number is composed of the product model number and suffixes indicating the full-scale flow rate, as well as the other parameters. Refer to the following for details.

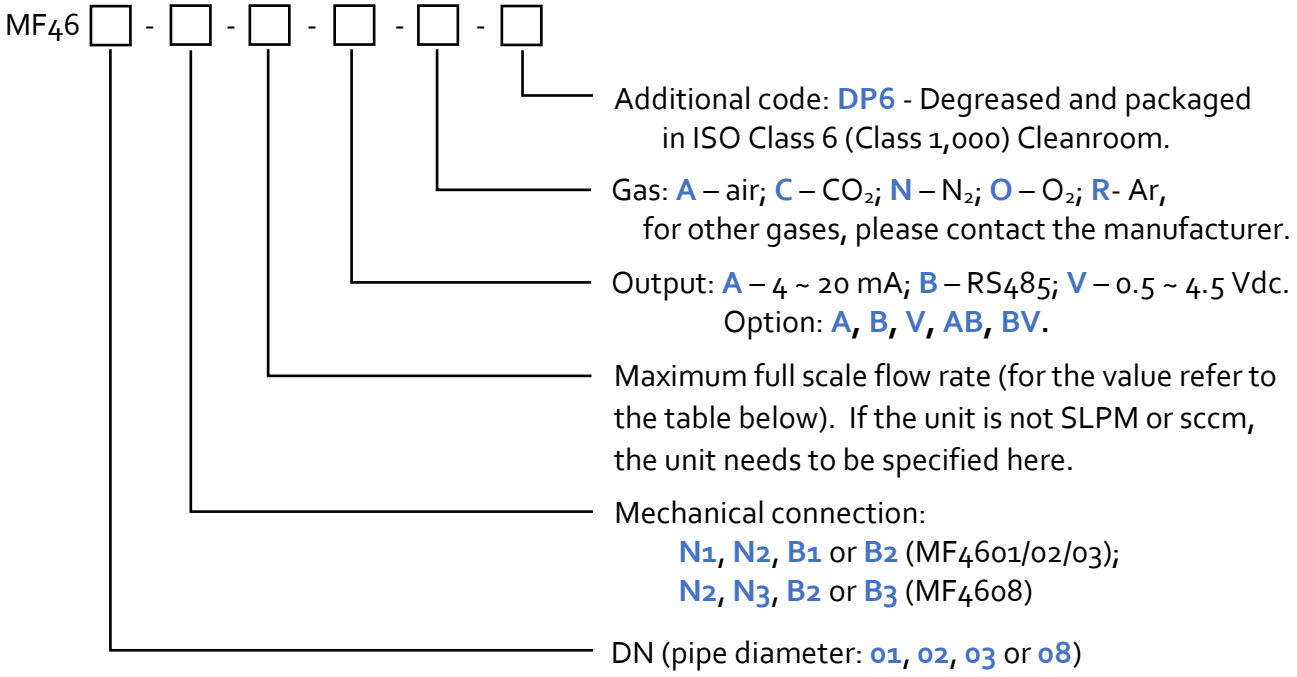

Table 6.1: Mechanical connection and full-scale flow range of all models.

Model	DN (mm)	Mechanical Connection	Flow range		
			sccm	SLPM	SCFH
MF4601	1.0	N1 - NPT 1/8"-female, N2 - NPT 1/4"-female, B1 - BSPT 1/8"-female, B2 - BSPT 1/4"-female	0 ~ 100, 200		
MF4602	2.0		0 ~ 500, 1000	0 ~ 1	0 ~ 1, 2
MF4603	3.0			0 ~ 2, 5	0 ~ 5, 10
MF4608	8.0	N2 - NPT 1/4"-female, N3 - NPT 3/8"-female, B2 - BSPT 1/4"-female, B3 - BSPT 3/8"-female		0 ~ 10, 20, 50	0 ~ 20, 50, 100

Table 6.2: Units conversion table

sccm	**SLPM**	SCFH	NCMH		sccm	SLPM	**SCFH**	NCMH
100	0.1				470	0.47	**1**	0.03
200	0.2				940	0.94	**2**	0.06
500	0.5				2360	2.36	**5**	0.14
1000	**1**	2.12	0.06		4720	4.72	**10**	0.28
	2	4.24	0.12		9440	9.44	**20**	0.57
	5	10.59	0.30			23.60	**50**	1.42
	10	21.19	0.60			47.19	**100**	2.83
	20	42.38	1.20					
	50	105.9	3.00					

7. Technical specifications

All specifications listed in the following table, unless otherwise noted, apply for calibration conditions at 20°C and 101.325 kPa absolute pressure with air. The product is horizontally mounted at the time of calibration.

	Value	Unit
Full-scale flow range	See Table 6.1	
Accuracy	±(2.0+0.5FS)	%
Repeatability	(0.5+0.15FS)	%
Turn-down ratio	50:1	
Working temperature	-10 ~ +55	°C
Maximum pressure	1.0	MPa
Humidity	<95, no condensation	%RH
Power supply	8 ~ 24 (50 mA)	Vdc
Digital output	RS485 Modbus half-duplex	
Analog output	0.5 ~ 4.5 Vdc / 4 ~ 20 mA	
Electrical connector	AMPMODU MTE 5 positions	
MENU access	3 key – front face keyboard/digital	
Display	Instant flow rate, totalizer, or accumulated flow rate with LED & 2 indicators	
Control	Manual	
Mechanical connection	See Table 6.1	
Protection	IP40	
Storage temperature	-20 ~ +70	°C
Reference conditions	20°C, 101.325 kPa, air	
Fluid compatibility	Non-corrosive	
CE	EN61326-1; -2; -3	

	MF4601	MF4602	MF4603	MF4608	
Maximum overflow	2	6	30	200	SLPM
Maximum flow change	0.3	1	4	30	SLPM/sec

Note: 1. For other features or specifications not listed, please get in touch with the manufacturer.

8. Wetted materials and compatibility

The product flow channel is made of stainless steel. Flow conditioner is made of Acrylonitrile Butadiene Styrene (ABS). The sensing element comprises silicon, silicon nitride, and silicon dioxide. The sensor chip surfaces are passivated with silicon nitride and silicon dioxide. The electronic sealing is provided by LOCTITE Ablestik 84-3J. Another wetted material that may be exposed is FR-4.

9. Technical notes for the product performance

9.1 Measurement principle

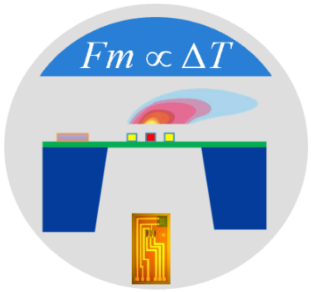

Figure 8.1: Measurement approach illustration.

The products utilize the Company's proprietary micro-machined (MEMS) calorimetric sensing and data processing technology. A thermal signal generator with a pair of sensing elements upstream and downstream of the microheater is precisely manufactured and separated at predefined micrometer distances on a chip surface with excellent thermal isolation. When a fluid is flowing through the sensing chip, the fluid carries the thermal signal downstream. The sensing elements register the temperature differences, which are then correlated with the fluid mass flow rate via the calibration process.

The calorimetric sensing approach offers an extensive dynamic range with better performance against environmental parameter alternations. Please refer to the company's US patents and other publications made available to the public for additional information.

9.2 Precautions for the best performance of the product

9.2.1 Comparison with a third-party reference meter

It is common for users to compare product data with a third-party reference meter, and in many cases, discrepancies may arise.

When performing such a comparison, please note that the reference meter should have a better-specified accuracy (about 1/3 of the product), and pay special attention to the differences in the reading accuracy and full-scale accuracy.

A full-scale accuracy = reading accuracy x (full-scale flow rate/ set point (current) flow rate)

Another key point to comparing the different flow meters is that as long as the fluidic flow is a continuous flow without pulsation, then the fluid dynamics will have the system following the Bernoulli equation:

$$P_1 + \frac{1}{2}\rho v_1^2 + \rho g h_1 = P_2 + \frac{1}{2}\rho v_2^2 + \rho g h_2$$

Where ρ is the fluid density, g is the acceleration due to gravity, P1 is the pressure of the reference meter, P2 is the pressure at the test meter, v1 is the velocity of the reference meter, and v2 is the

velocity of the test meter. h1 and h2 are the corresponding heights for the meters, which are generally the same in the system. Therefore, it would be very critical for the system to have no pressure variation. (This explains our recommendations for the installations in Section 4). Also, the meter measurement principle is often very important for the understanding of any discrepancies.

Please note that for comparison with a rotameter, the reading could have large deviations due to the different measurement principles, in particular, as a rotameter is sensitive to pressure and temperature variations.

9.2.2 Control flow with a manual valve

The precision of the control will be heavily dependent on the valve characteristics. The valve is specified with its turns from full closed to full open. The current product is shipped with a valve of 12 turns for the full scale, but can be configured with high-precision valves with up to 16 turns. Contact the manufacturer for additional information.

9.2.3 Particle contamination and fluidic cleanness

Any contamination, including particles and liquid vapors, would be detrimental to the accuracy of the flow measurement and also to the meter functionality. It is essential to ensure the applied flow medium will be clean and dry. If any contamination is suspected, please allow experienced technical personnel to have it checked and reconditioned. Do not use a foreign cleanser or other fluids to clean the flow path, which could bring irrecoverable damage.

9.2.4 Apply to a different gas medium

The product is calibrated with a high-precision NIST traceable metrological standard with clean and dry air. In case the meter is applied to meter the other clean and dry gas, a correct gas conversion factor needs to be registered in the meter before the measurement.

The meter operates similarly to the principle described in the international standard for thermal mass flow meters (ISO 14511:2001 - Measurement of fluid flow in closed conduits — Thermal mass flowmeters). Due to the meter assembly procedure, the head loss value from the meter to the meter would not be 100% identical. At the extensive dynamic measurement range, the thermal response would also have some deviations and nonlinearity from gas to gas. Therefore, measurement by the meter for a gas medium other than the calibration gas would bear larger measurement errors, particularly at the low Reynolds number range, where the laminar flow has a sensitive flow profile.

10.Troubleshooting

Phenomena	Possible causes	Actions
No signal/display	The power is not connected; the battery is empty	Connect the power, check the cable
	Cable connection incorrect	Check the cable.
	No flow or clogging	Check flow and contamination.
	Power regulator failure	Return to the factory..
	Sensor failure	Return to the factory.
Significant errors or unexpected flow rate	Particles, fluid type	Check the system.
Erroneous or large noise	Vibration, unstable flow	Check the system.
Valve not work	Wire connection, valve	Return to the factory.
Offset unstable	Circuitry instability	Check the system, power off
No digital interface	Wrong address, software	Check commands, connection
No wireless, BT cannot pair	Wrong model, data jam	Check model, power off/on

11. Warranty and Liability

(Effective January 2018)

Siargo warrants that the products sold hereunder will be used appropriately and installed correctly under normal circumstances and service conditions. As described in this user manual, it shall be free from faulty materials or workmanship for 180 days for OEM products and 365 days for non-OEM products from the date of shipment. This warranty period is inclusive of any statutory warranty. Any repair or replacement of a serviced product shall bear the same terms in this warranty.

Siargo makes no warranty, representation, or guarantee and shall not assume any liability regarding the suitability of the products described in this manual for any purposes that are not specified in this manual. The users shall be held fully responsible for validating the performance and suitability of the products for their particular design and applications. For any misuse of the products out of the scope described herein, the user shall indemnify and hold Siargo and its officers, employees, subsidiaries, affiliates, and sales channels harmless against all claims, costs, damages, and expenses or reasonable attorney fees from direct or indirect sources.

Siargo makes no other warranty, express or implied, and assumes no liability for any special or incidental damage or charges, including but not limited to any damages or charges due to installation, dismantling, reinstallation, etc., or consequential or indirect damages of any kind. To the extent permitted by law, the exclusive remedy of the user or purchaser, and the limit of Siargo's liability for any and all losses, injuries, or damages concerning the products, including claims based on contract, negligence, tort, strict liability, or otherwise shall be the return of products to Siargo, and upon verification of Siargo to prove to be defective, at its sole option, to refund, repair or replacement of the products. Regardless of form, no action may be brought against Siargo more than 365 days after a cause of action has accrued. The products returned under warranty to Siargo shall be at the user or purchaser's risk of loss and will be returned, if at all, at Siargo's risk of loss. Purchasers or users are deemed to have accepted this limitation of warranty and liability, which contains the complete and exclusive limited warranty of Siargo. It shall not be amended, modified, or its terms waived except by Siargo's sole action.

This manual's product information is believed to be accurate and reliable at the time of release or when made available to the users. However, Siargo shall assume no responsibility for any inaccuracies and/or errors and reserves the right to make changes without further notice for the relevant information herein.

This warranty is subject to the following exclusions:

(1) Products that have been altered, modified, or have been subject to unusual physical or electrical circumstances, as indicated, but not limited to those stated in this document or any other actions which cannot be deemed as proper use of the products;

(2) Products that have been subject to chemical attacks, including exposure to corrosive substances or contaminants. In the case of battery usage, long-term discharge, or leakage-induced damage;
(3) Products that have been opened or dismantled for whatever reason;
(4) Products that have been subject to working conditions beyond the technical specification as described by this manual or related datasheet published by the manufacturer;
(5) Any damages incurred by the incorrect usage of the products;
(6) Siargo does not provide any warranty on finished goods manufactured by others. Only the original manufacturer's warranty applies.
(7) Products that unauthorized dealers or any third parties resell.

12. Service/order contact and other information

Siargo Ltd. is making every effort to ensure the quality of its products. For questions or product support, please get in touch with your direct sales representative. If you need additional assistance, please reach out to customer service at the address listed below. We will respond to your request in a timely fashion and work with you toward your complete satisfaction.

For sales or product orders, please get in touch with the local sales representatives or distributors listed on the company's webpage: www.Siargo.com.

For any returns, please get in touch with your direct sales representative to obtain an RMA. If you require further assistance, please contact info@siargo.com for additional information or a Return Materials Authorization (RMA) before returning the product to the factory for servicing, including calibration. Please specify in your email message that you intend to return the product to the factory and include your shipping address. Be sure to write the RMA on the returned package or include a letter with the RMA information.

Direct customer service request(s) should be addressed to

Siargo Ltd.
4677 Old Ironsides Drive, Suite 310,
Santa Clara, California 95054-1857, USA
Tel: +1(408)969-0368
Email: Info@Siargo.com

For further information and updates, please visit www.Siargo.com.

Appendix I: Product evaluation kit

Siargo offers a product evaluation kit, including a digital data converter, USB data cable, and User Application software, that allows the user to evaluate the product performance on a Microsoft Windows-based computer. For some simple applications with digital data transfer, this kit could serve the purpose. The user can read and visualize the flow rate of the product, obtain the totalizer or accumulated flow rate values, and save the data for further analysis. It can read from up to 128 sensors with the RS485 interface in serial.

For further information and purchase of the evaluation kit, please get in touch with the manufacturer or the sales representative.

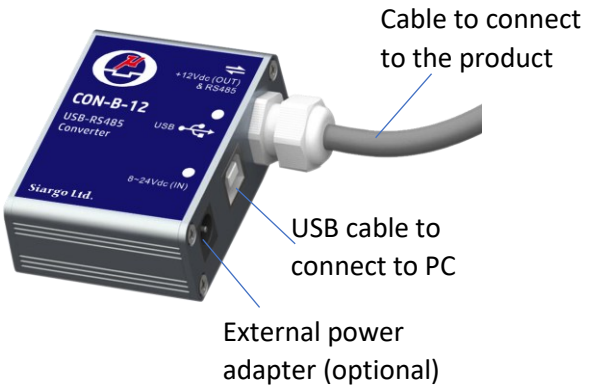

Each converter has a fixed cable that can be directly connected to the product. The USB cable connected to the PC is also included.

For most of the products, the power from the PC via the USB cable will be sufficient to power the sensor product; no external power will be required. However, for multiple sensors in serial, the power via the USB cable may not be enough; an external power adapter with 8~24Vdc will be necessary.

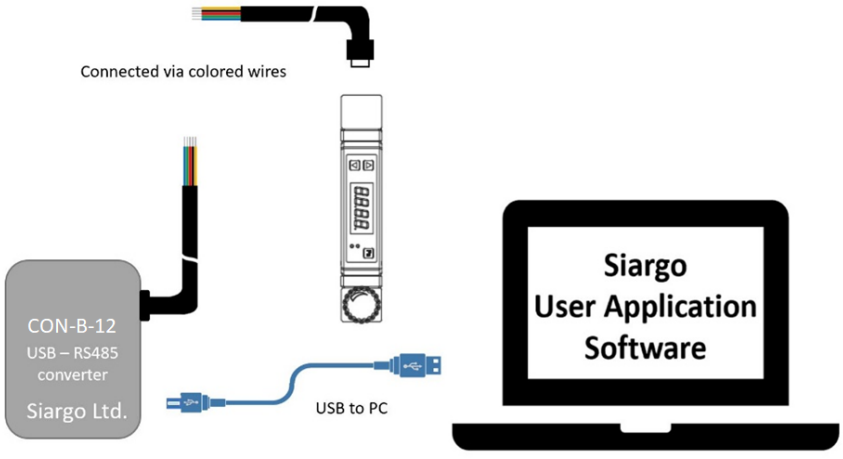

Appendix II: Document history

Revision VB.4 (December 2025)

- Add special code for degreased and packaged in product selection.

Revision VB.3.06 (August 2025)

- Corrections.

Revision VB.3.05 (October 2024)

- Correct the full scales of MF4603.

Revision VB.3.04 (July 2024)

- Minor correction.

Revision VB.3.03 (July 2023)

- Update contact address and corrections.

Revision VB.3.02 (November 2022)

- Minor correction.

Revision VB.3.01 (October 2022)

- Correct the product description.

Revision VB.3 (July 2022)

- Update dimensions;
- Remove RS232 output;
- Add the 4 ~ 20 mA output;
- Update service and contact information.

Revision VB.2 (June 2021)

- Corrections.

Revision VB.1 (March 2021)

- Reformat, correct, and add the evaluation kit.

Revision VA.5 (July 2019)

- Update the MENU key functions.

Revision VA.4 (July 2018)

- Add the RS485 Modbus protocol.

Revision VA.3 (November 2017)

- Added maximum overflow and maximum flow changes;
- Added the revision history (Appendix).