Siargo Ltd.



Gas Mass Flow Meter VC.8.04

Model

© 2026 Siargo Ltd.

www.Siargo.com

Gas Mass Flow Meter

with MEMS thermal sensing technology

MF5700 Series

User Manual

Document No. 03-2026-MF2 EN
Issue date: 2026.03
Revision: VC.8.04

Siargo Ltd.
4677 Old Ironsides Drive, Suite 310,
Santa Clara, California 95054-1857,
USA

Tel: +1(408)969-0368
Email: Info@Siargo.com

© Copyright 2026 by Siargo Ltd.
Siargo Ltd. and its subsidiaries reserve the right to change the specifications and/or descriptions without prior notice. For further information and updates, please visit: www.Siargo.com

Attention !

- Please carefully read this manual before operating this product.
- Do not open or modify any hardware that may lead to irrecoverable damage.
- Do not use this product if you suspect any malfunctions or defects.
- Do not use this product for corrosive media or in a strong vibrational environment.
- Use this product according to the specified parameters.
- Only the trained or qualified personnel shall be allowed to perform product services.

Use with caution !

- Be cautious of electrical safety, even if it operates at a low voltage; any electrical shock might lead to some unexpected damage.
- The gas to be measured should be clean and free of particles. Do not apply this meter to a liquid medium.
- Do not apply for any unknown or non-specified gases that may damage the product.
- For wireless data with NB-IoT, please be sure the network is available.

Table of Contents

1. Overview 5
2. Receipt / unpack of the products 6
3. Knowing the products 7
   3.1 Product description 7
   3.2 LCD description 8
   3.3 Power and data cable description 9
   3.4 Mechanical dimensions 9
4. Installation 11
5. Operation and MENU description 14
   5.1 Check the product specifications 14
   5.2 Check the leakage 14
   5.3 Power the meter and digital data connection 14
   5.4 Wireless data communication 15
      5.4.1 Bluetooth communication. 15
      5.4.2 WIFI communication 15
      5.4.3 Other IoT communication options 15
   5.5 Meter MENU description 16
      5.5.1 Starting the measurement 16
      5.5.2 MENU entry with a verified password 17
      5.5.3 Set the RS485 Modbus address 17
      5.5.4 Set the RS485 communication baud rate 18
      5.5.5 Reset or calibrate the offset 18
      5.5.6 Gas conversion factor (GCF) for different gas measurements 18
      5.5.7 Set the response time 19
      5.5.8 Select the totalizer or accumulated flow rate unit 19
      5.5.9 Select the instant flow rate unit 20
      5.5.10 Select the display mode 20
      5.5.11 Select the display language 20
      5.5.12 Open/close the valve 21

5.5.13 Set an alarm: upper instant flow rate limit 21
5.5.14 Set an alarm: lower the instant flow rate limit 21
5.5.15 Set an alarm: accumulated flow rate or totalizer limit 22
5.5.16 Change the default password 23
5.5.17 Reset the accumulated or totalized flow rate 23
5.5.18 Exit the MENU 23
5.5.19 Sleeping mode 24
5.5.20 Wake up the meter 24
5.5.21 MENU key sequence for the settings 25
5.6 RS485 Modbus communication protocol 26
5.6.1 Hardware connection 26
5.6.2 Communication parameters 26
5.6.3 Frame 27
5.6.4 Function codes 27
5.6.5 Registers 27
6. Product selection and order information 33
7. Technical specifications 34
8. Wetted materials and compatibility 35
9. Technical notes for the product performance 36
9.1 Measurement principle 36
9.2 Precautions for the best performance of the product 36
9.2.1 Comparison with a third-party reference meter 36
9.2.2 Particle contamination and fluidic cleanness 37
9.2.3 Apply to a different gas medium 37
10. Troubleshooting 38
11. Warranty and Liability 39
12. Service/order contact and other information 41
Appendix I. LoRa communication protocol 42
Appendix II: Product evaluation kit 43
Appendix III: Document history 44

1. Overview

All contact information can be found at the end of this manual.

This manual provides essential information for operating the MF5700 series of gas mass flow meters in general-purpose gas metrology applications. Product performance, maintenance, and troubleshooting, as well as information on product orders, technical support, and repair, are also included.

The MF5700 mass flow meter is one of the company's best-selling products, thanks to its performance and cost-effective design enabled by the company's proprietary MEMS (micro-electro-mechanical systems) thermal sensing technology. The current model is the 3rd generation of the product, having significantly upgraded features since its first release in 2010. The upgrade includes much-improved accuracy, an additional model to cover flow range and channel-size compatibility, and significantly extended measurement dynamic range, wireless data options, and valve options. The upgrade also ensures back compatibility for our existing customers. Siargo is committed to continuous product innovation while offering the best value to our customers.

This series of products is designed for general-purpose mass flow sensing and control purposes. The wetted materials of the products are compatible with most common gases, including oxygen, nitrogen, air, argon, and carbon dioxide. Siargo also offers a broad spectrum of off-the-shelf and customized flow, pressure, temperature/humidity, and gas-concentration sensing products, and provides integration and turnkey solutions to our customers. Please contact the manufacturer for additional information.

2. Receipt / unpack of the products

Upon receipt of the products, please check the packing box before dismantling the packing materials. Ensure no damage during shipping. If any abnormality is observed, please contact the carrier that shipped the product and inform the distributors or sales representatives if the order was not placed directly with the manufacturer. Otherwise, the manufacturer should be notified. For any further actions, please refer to the return and repair section in this manual.

If the packing box is intact, open it to find the product (either the meter or the meter with the valve, as specified in the actual order). The power adapter and/or data cable, as shown below, may also be included with your exact order.



Flow meter

or



Flow meter with valve



Adapter



data cable

Figure 2.1: MF5700 flow meter and accessories

Please check the integrity of the product and the power and data cables immediately. If any abnormalities are identified, please notify the distributor/sales representative or manufacturer as soon as possible. If any defects are confirmed, an exchange shall be arranged immediately via the original sales channel. (Note: the LCD screen shall not be lit until the battery is installed or the power cable is plugged in.) This user manual shall also be included in the packing box or made available upon request via an electronic version. In most cases, this manual shall be made available to the customer before the order is placed.

The meter is designed to operate on low power, utilizing 4 AA batteries. However, if you ordered the product with the control valve, it is recommended to use external power, as the valve requires a large amount of power. A power adapter must have a safety certification for use with this meter. The external power/data connector is a Type-C USB. See the detailed requirements in the operation section.

3. Knowing the products

3.1 Product description

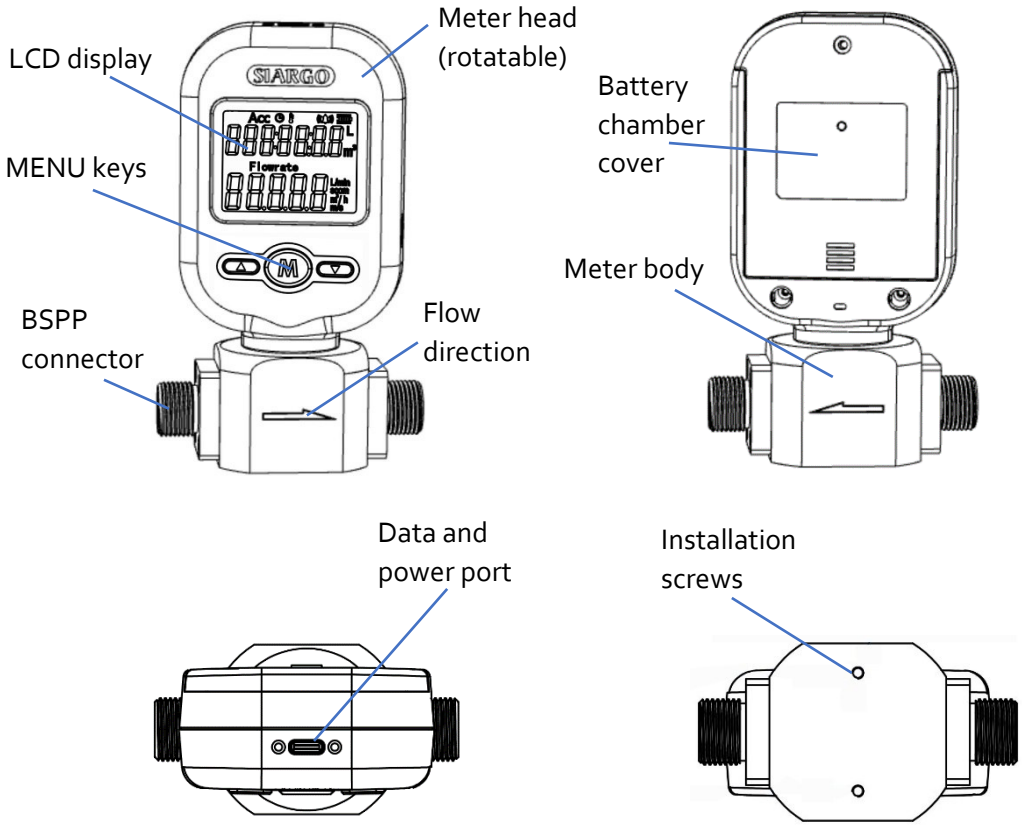

Figure 3.1: MF5700 parts description

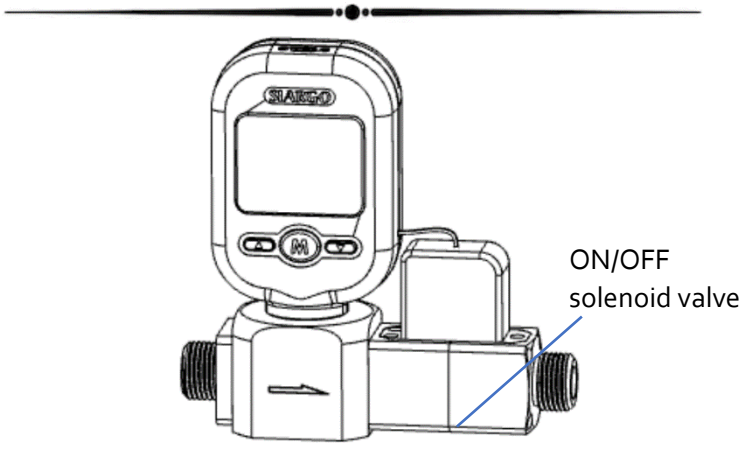

Figure 3.2: MF5700 with valve

3.2 LCD description

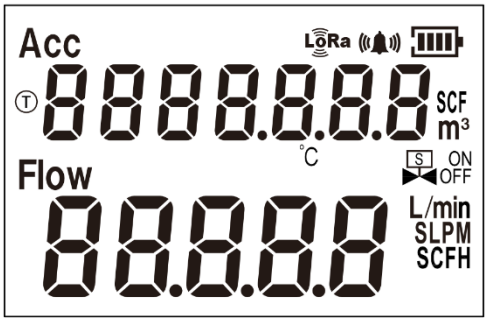

The LCD shows all the information measured by the product. Some symbols are reserved for future upgrades and will not be lit during the operation. The following table details the meaning of each of the symbols.

Figure 3.3: LCD symbol illustration.

Table 3.1: Symbol descriptions

ACC	The top row. The default displays the accumulated or totalized flow rate in m^3 (cubic meters), range 0000.000 m^3 ~ 9999999 m^3. 0000.000 m^3 → 9999.999 m^3 → 10000.00 m^3 → 99999.99 m^3 → 100000.0 m^3 → 999999.9 m^3 → 1000000 m^3 → 9999999 m^3 The accumulated or totalized flow rate unit can be set to SCF (standard cubic feet), with a range of 0000.000 SCF ~ 9999999 SCF. 0000.000 SCF → 9999.999 SCF → 10000.00 SCF → 99999.99 SCF → 100000.0 SCF → 999999.9 SCF → 1000000 SCF → 9999999 SCF
Ⓣ	The top row also displays temperature*.
Flow	The 2nd row. Displays instant flow rate in L/min (Liters per minute), SLPM (Standard liters per minute), or SCFH (Standard cubic feet per hour), with a range of 0.00 ~ 999.99 L/min, SLPM, or SCFH.
	Battery status.
S ON OFF	Valve status. The current product provides an ON/OFF control valve.
LoRa	The LoRa wireless protocol is enabled when it lights up.
NB	NB-IoT wireless protocol is enabled when the lights are up.
	The Wi-Fi wireless protocol is enabled when the Wi-Fi light turns on.
	Bluetooth LE 4.2 wireless protocol is enabled when the lights are turned on.
	Reserved for future upgrade of GPRS inclusion.

***Note:** Both the pressure and temperature sensors can be integrated with the current product, but not with the default models. Please contact the manufacturer for further information.

3.3 Power and data cable description



Figure 3.4: MF5700 cable (USB-C-100)

Table 3.2: MF5700 wire assignment.

Wire	Color	Definition
1	Red	Power supply **Standard version:** 5 ~ 24 Vdc **Wireless version:** 5 ~ 24 Vdc **Valve integrated version:** 18 ~ 24 Vdc
2	Black	GND, ground
3	Green	RS485A (+)
4	White	RS485B (-)

3.4 Mechanical dimensions

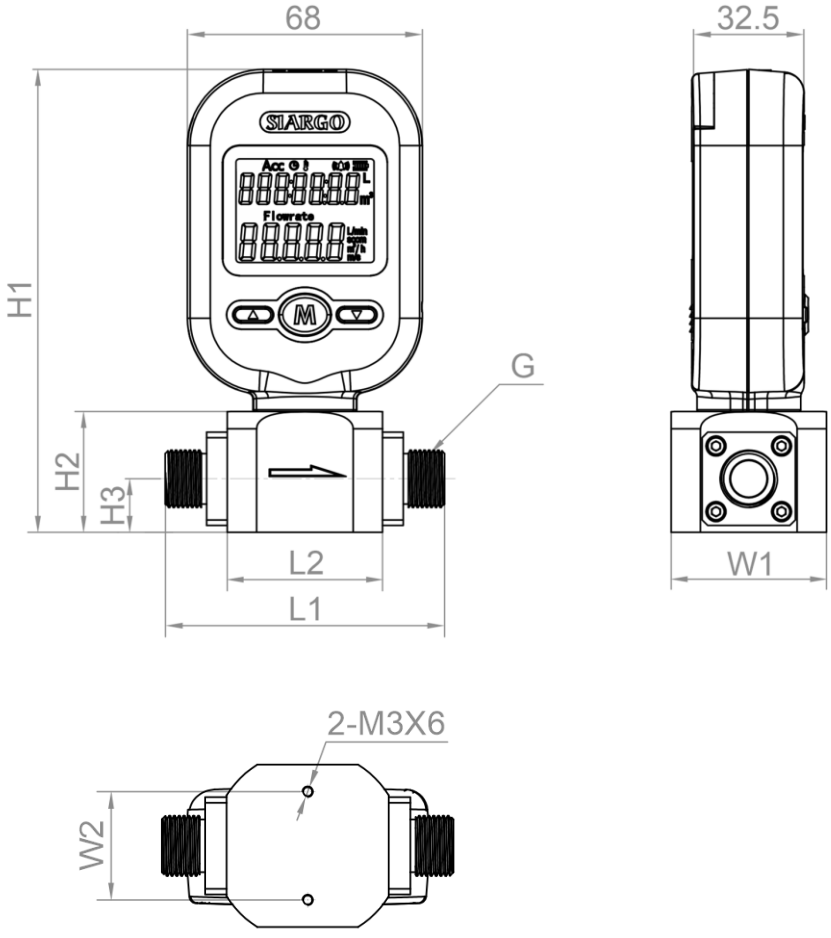

Figure 3.5: MF5700 meter dimensions

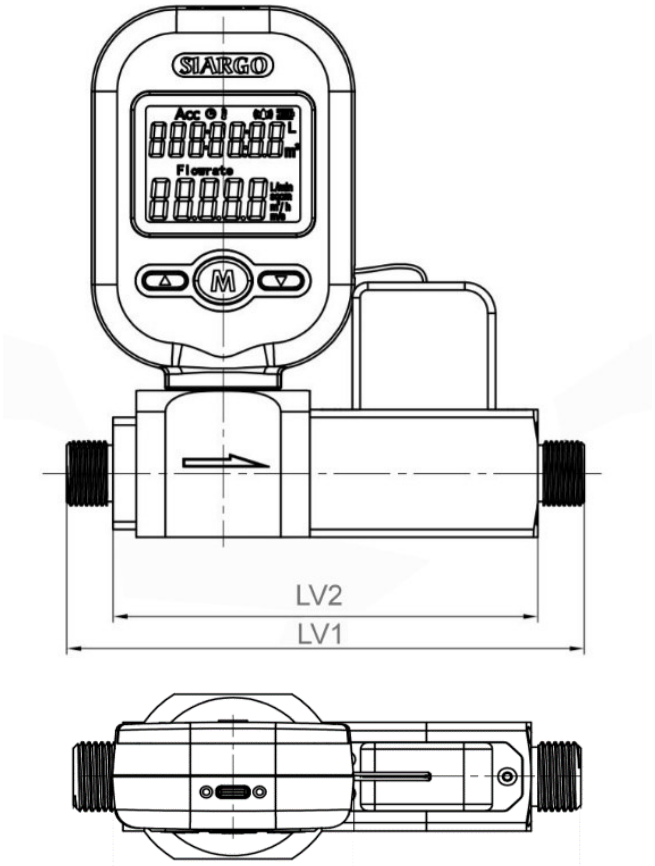

Figure 3.6: MF5700 meter with control valves dimensions

Table 3.3: Mechanical dimensions of the meters/meters with control valves

	Connector, G	L1	L2	LV1	LV2	W1	W2	H1	H2	H3
MF5706	BSPP 1/4"	61	34	95.5	123	34	26	127	28	12.5
	NPT 1/4"	67								
MF5708	BSPP 3/8"	81	45	110	134	45	30	134	35	15.5
	NPT 3/8"	88								
MF5712	BSPP 1/2"	90	50	115	143	50	30	141	42	19.5
	NPT 1/2"	98								
MF5719	NPT 3/4"	102	56	-	-	56	30	149	50	22.0

4. Installation

Do not open or alter any part of the product that would lead to malfunction and irrecoverable damage. It will also forfeit the warranty terms and expose the party to liability.

The product, at the time of shipment, is fully inspected for quality and meets all safety requirements. Additional safety measures should be implemented during installation. This includes, but is not limited to, leakage verification procedures, standard EDS (electrostatic discharge) precautions, and DC voltage precautions. Other tasks, such as calibration, part replacement, repair, and maintenance, must only be performed by trained personnel. Upon request, the manufacturer will provide necessary technical support and/or training for the personnel.

The product is preferably installed horizontally. The flow direction should align with the arrow on the meter body. If the flowing fluid may have particles or debris, a filter is strongly recommended to be installed upstream of the meter.

Please follow the following steps to complete the installation:

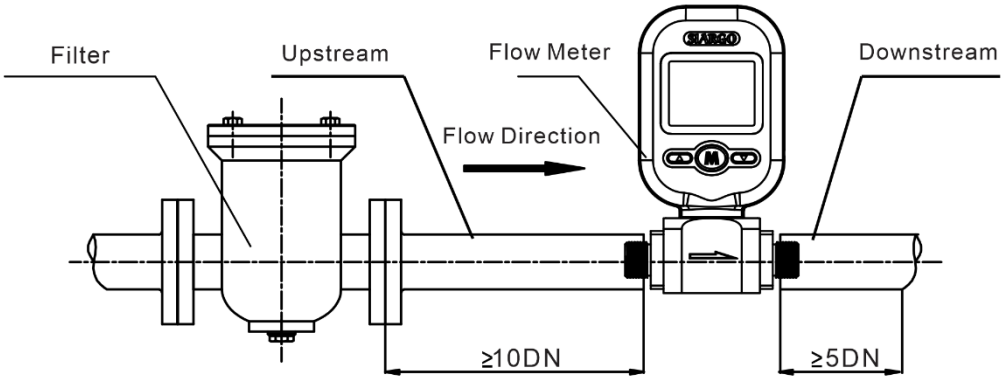

Figure 4.1: MF5700 meter installation

a) Upon opening the package, the product's physical integrity should be inspected to ensure no visual damage.

b) Before installation of the product, please ensure that the pipe is free from debris, particles, or any other foreign materials.

c) Cautions during installation:

(i) It is preferable first to install the inlet end of the meter and then the outlet end of the meter; To ensure measurement accuracy, an upstream straight pipe of length no less than 10DN and a downstream straight pipe of length no less than 5DN should be in place. Please refer to the following recommended installation configuration.

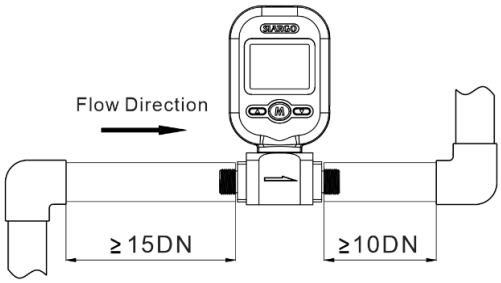

(a) 90-degree elbow or T-piece

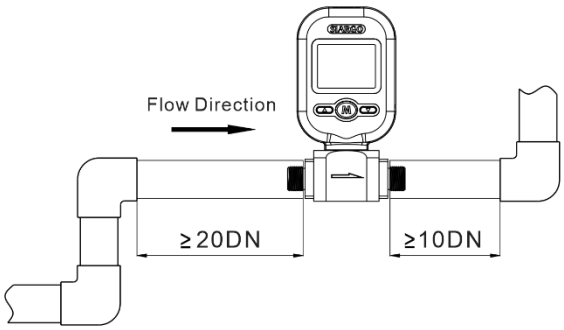

(b) 2x90-degree elbow

Figure 4.2: MF5700 meter installation

(ii) If the upstream or downstream pipe size is different from that of the product, the size of the installation line pipe diameter(s) should be larger than the flow channel (pipe) size of the meters to be installed. For some typical situations, please follow the installation recommendations detailed in the following sketches.

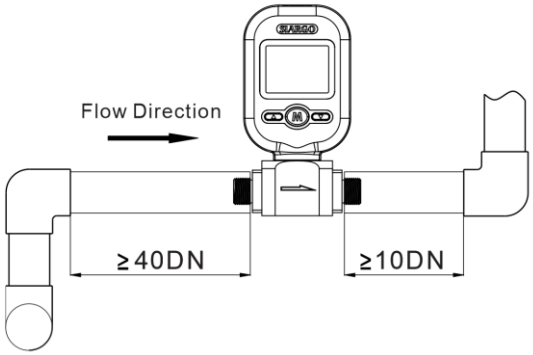

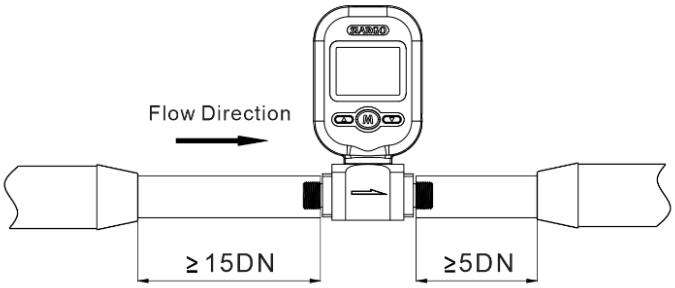

(c) 2x90-degree elbow, 3D (d) Pipe size-reduction

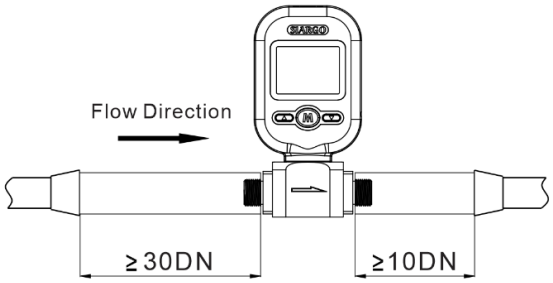

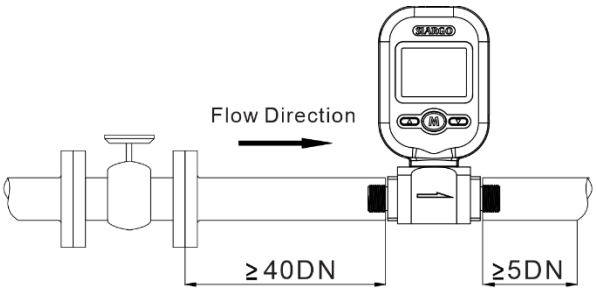

(e) Pipe size expansion

(f) Control valve at upstream or downstream

Figure 4.3: MF5700 meter installation

(iii) During installation, please make sure no foreign materials (such as water, oil, dirt, particles, etc.) enter the installation pipeline.

d) Install 4-AA batteries into the battery chamber. If an external power supply is desired, connect the electrical wires per the wire definitions in Table 3.2. Please confirm the power supply range (i.e., 5 ~ 24 VDC) and the power supply polarity. If an adapter is not the one supplied by the manufacturer, make sure it meets industrial standards and has all required safety certifications.

e) For the communication wire connection, please follow the description in Table 3.2 and make sure that the wires are correctly connected to the proper ports on your data device/equipment. Please make sure the data cable meets industrial standards with adequate shielding.

f) Once the battery is installed or the external power is successfully connected, the LCD should be lit up with the proper information displayed to work correctly.

g) Slowly open the valve(s) if any, upstream or downstream, or both of the pipeline, and the meter should then start to measure the flow in the pipeline.

Note: Because the meter has an extensive dynamic measurement range, it is normal to see a small instant flow rate before opening the valve, as there may be some leakage. However, make sure the meter reads null when there is no flow present in the pipeline.

h) This will conclude the installation.



Cautions

a) Don't alter any parts of the product.

b) Ensure the electrical connection is done correctly per the instructions.

c) Make sure no mechanical stresses in the connections.

d) The strong electromagnetic interference sources close by or any mechanical shocks at the pipeline may also create malfunctioning of the product.

e) Slowly open/close valves to prevent abrupt pulse flow impact.

5. Operation and MENU description

5.1 Check the product specifications

Before using this product, check the product specifications in this manual or the basic information on the back panel.

The detailed product technical specifications are in Section 7. For a specific application, the pressure rating must not exceed the system pressure to be measured, and the flow range should also fall within the specified range. In most cases, using a high full-scale-range meter for very low flow-rate measurements often results in erroneous data. The gas to be measured must also be consistent with the product specification. Be particularly cautious about the supplied voltage indicated in the specification. A higher voltage may cause irreparable damage, and a lower voltage will not power the product for any desired functions.

For optimal product performance, it is recommended that the gas to be measured be clean and free of particles or other foreign materials.

5.2 Check the leakage

Check for gas leakage before any measurement. If it is needed, pressurized nitrogen or air can be used for the leakage check.

5.3 Power the meter and digital data connection

Although this product complies with the CE-required EMC regulations, it must also be used in accordance with standard electrical device practice. For general-purpose usage, the meter can be powered by 4 AA batteries. Be sure to select batteries with safety features and within their expiration dates. Do not use batteries without a known manufacturer and expiration date. For models with control valves or extensive use, it is recommended to power the meter with external DC power or an AC-DC adapter. Make sure the supply voltage is within the specified range in Section 7. Before connecting the product to external power, ensure you follow standard electrical device precautions, including ESD (electrostatic discharge) and DC voltage precautions. Excessive electrostatic discharge may damage the product.

The power and data are connected via a standard Type-C USB port. The manufacturer-supplied Type-C USB cable has a screw-locking fixture. It is recommended to use this feature to ensure the cable is engaged correctly and will not accidentally get unplugged.

Half-duplex RS485 Modbus is used for digital data communication. Make sure the wires are correctly connected to the receiver side.

5.4 Wireless data communication

The product offers optional wireless data transmission via Bluetooth LE 4.2, LoRa, Wi-Fi, and NB-IoT.

5.4.1 Bluetooth communication.

An application ("APP") named "Siargo Smart Meter 2.0" can be downloaded from either the Apple Store for smart devices based on the iOS system or from the Google Play Store for smart devices based on the Android system.

The APP provides basic functions to access meter/sensor data, plot an instantaneous flow rate chart, and calculate total or accumulated flow volume at a time specified by the user. It enables users to send local data instantly to a remote destination when a wired connection is unavailable. Also, the interface provides readouts of product and technical support information. Please check back for any updates on the APP information.

5.4.2 WIFI communication

In the current configuration, this option is available for IoT applications, where customers are responsible for developing web-based cloud software for their specific applications. Siargo maintains a demo version with the server located at its California operation facility. This demo cloud software offers basic functions such as instant meter data and totalized data with date and time. For additional information and cloud data access, please contact the manufacturer. A more user-friendly demo webpage will be available to help users register the meter and access meter data instantly. Please check with the manufacturer for the release date of the version that allows user self-registration.

5.4.3 Other IoT communication options

For detailed protocols for LoRa, LoRaWAN, NB-IoT, CAT-M, and other IoT communication options, Siargo only offers a demonstration with limited functionality. The application-specific cloud data software will be the customers' responsibility. Please contact the manufacturer for further information.

5.5 Meter MENU description

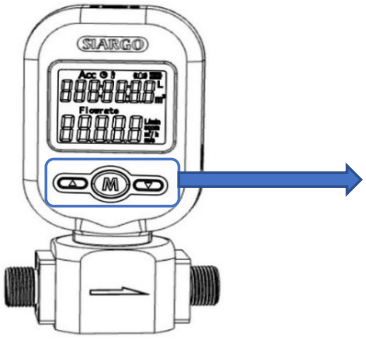



The meter features a front 3-key board, allowing users to set desired functions, access data, and check the status. The Menu key (M) is located in the center, allowing the user to select a function and perform confirmation or other related actions, which will be detailed below. Two keys ("Up" and "Down") are used to select the menu and sub-menu.

5.5.1 Starting the measurement

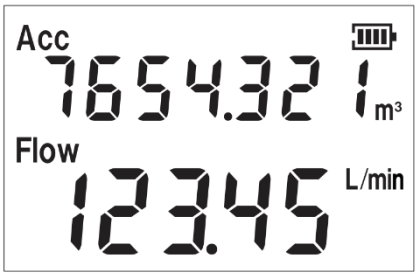

Once power is supplied and no abnormal issues are observed, the meter is ready to take measurements. The default display is for the mass flow measurement, having two numerical lines on the LCD. The upper line represents the accumulated, or totalized, flow rate, and the lower line represents the instantaneous flow rate. If the battery symbol turns on, proceed to change the battery or plug in the external power cord.

The LCD capability limits the display characters; the following table is an illustration.

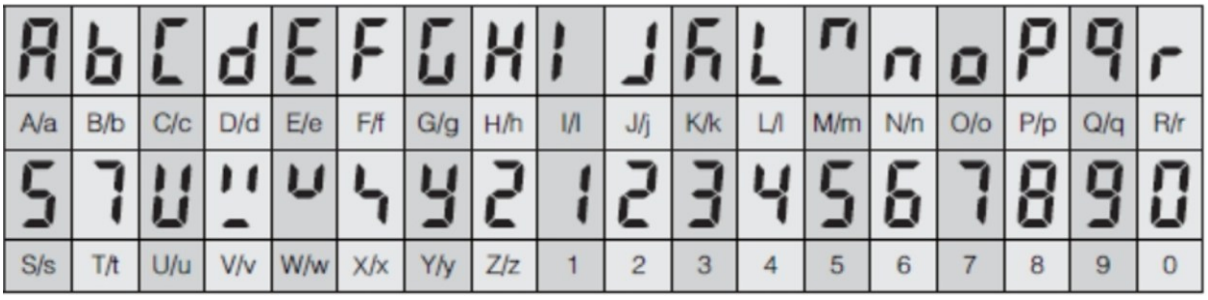

5.5.2 MENU entry with a verified password



At the flow measurement (primary) display, press the central "M" MENU key, which will enter the password setting and verification MENU. The default password is "11111". If the password is incorrect, the display will return to the main display.

To enter a new password, press the "Up" or "Down" key to change the flashing digit, then press the "M" key to confirm. Repeat this process for all five digits, and the meter will enter the menu setting interface/screen.

Subsequently, the MENU allows the user to:

➢ Set Modbus address	F2 - Addr
➢ Change communication baud rate	F3 - bPS
➢ Reset or calibrate the offset	F11 - oFFST
➢ Enter the gas conversion factor (GCF)	F12 - GCF
➢ Change the response time	F16 – rESPS
➢ Select the totalizer or accumulated flow rate unit	F31 - UnT-A
➢ Select the instant flow rate unit	F32 - UnT-F
➢ Change the display mode	F38 - dISP
➢ Change the display language	F39 - LAnG
➢ Open/Close the valve	F43 - VALVE
➢ Set upper flow rate limit alarm	F51 - ALM-H
➢ Set lower flow rate limit alarm	F52 - ALM-L
➢ Set totalized or accumulated flow rate alarm	F53 - ALM-A
➢ Change the default password	F91 - PASS
➢ Clear or reset the totalizer or accumulated flow rate	F92 - CLr-A
➢ Exit from the MENU	F99 - qUIT

Note: During this process, the meter will continue to measure flow without interruption.

5.5.3 Set the RS485 Modbus address



After the password is verified and entered into the MENU settings, press the "Up" or "Down" key until the screen shows the F2-Addr as indicated to the left.

The Modbus address has three digits, which can be any number between 001 and 247. Press the "M" key to enter the change address screen. Press the "Up" or "Down" key to change the flashing digits, and then press the "M" key to confirm. After the address is set, the display will return to F2 - Addr, indicating the task is complete. Press

the "Up" or "Down" key to select F99 - qUIT and the "M" key to exit the MENU and return to the Main Display screen.

5.5.4 Set the RS485 communication baud rate

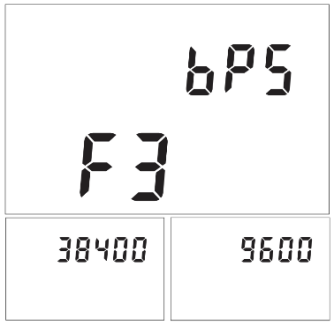

Following the steps above, on the MENU setting screen, use the "Up" or "Down" key to select F3-bPS, then press the "M" key to set the RS485 communication baud rate.

There are six selectable baud rates, depending on your system requirements: 4800, 9600, 19200, 38400, 57600, and 115200. The default baud rate is 9600. Use the "Up" or "Down" key to select the desired one and press the "M" key to confirm. The display will then return to the F3-bPS screen, indicating that the task is complete. Use the "Up" or "Down" key to select F99 - qUIT and the "M" key to exit the MENU and return to the Main Display screen.

5.5.5 Reset or calibrate the offset



After a specific period of usage, the meter's offset (zero flow rate) may exhibit a slight shift. When applying the meter to different gases, the offset might shift. To ensure measurement accuracy, it is necessary to reset or calibrate the offset. Following the steps mentioned above, at the MENU setting screen, use the "Up" or "Down" key to select F11 - oFFST. Before performing the task, ensure there is no flow in the flow channel; otherwise, it will lead to even more erroneous measurement results.

Press the "M" key to confirm the task; it will open the sub-MENU to confirm. Use the "Up" or "Down" key to select the desired one and press the "M" key to confirm. The display will then return to the F11 - oFFST screen, indicating the task is complete. Use the "Up" or "Down" key to select F99 - qUIT and the "M" key to exit the MENU and return to the Main Display screen.

5.5.6 Gas conversion factor (GCF) for different gas measurements

For general application purposes, a gas conversion factor (GCF) can be applied to measure gas differently from the default or calibration value. The GCF is determined by the thermal calorimetric sensing principle, the meter fluid dynamic design, and the control circuitry. Contact the manufacturer to obtain the values corresponding to the correct models.

The GCF for air is 1000.



Note: If the meter requires a special real-gas calibration, contact the manufacturer before placing the order.

Following the steps mentioned above, at the MENU setting screen, use the "Up" or "Down" key to select F12 - GCF. Press the "M" key to confirm, and it will open the sub-MENU showing the current gas conversion value. Use the "Up" or "Down" and the "M" confirming key to input the desired value, and press the "M" key again to complete the task. The display will then return to the F12 - GCF screen, indicating the task is complete. Use the "Up" or "Down" key to select F99 - qUIT and the "M" key to exit the MENU and return to the Main Display screen.

5.5.7 Set the response time



Following the steps mentioned above, on the MENU setting screen, use the "Up" or "Down" key to select F16 - rESPS, then press the "M" key to set the response time.

There are six selectable response times: 125, 250, 500, 1000, 2000, and 5000 milliseconds. The default response time is 125 msec. Use the "Up" or "Down" key to select the desired one and press the "M" key to confirm. The display will then return to the F16 - rESPS screen, indicating that the task is complete. Use the "Up" or "Down" key to select F99 - qUIT and the "M" key to exit the MENU and return to the Main Display screen.

5.5.8 Select the totalizer or accumulated flow rate unit

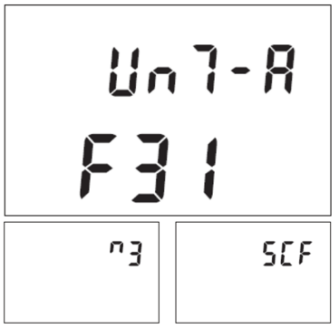

This function allows the user to select the totalizer or accumulated flow rate units as cubic meters (m^3) or standard cubic feet (SCF). Following the steps mentioned above, at the MENU setting screen, use the "Up" or "Down" key to select F31 – UnT-A. Press the "M" key to confirm, and it will open the sub-MENU showing the current unit. Use the "Up" or "Down" keys and the "M" confirming key to select the desired option, and press the "M" key again to complete the task. The display will then return to the F31 – UnT-A screen, indicating the task is complete. Use the "Up" or "Down" key to select F99 – qUIT and the "M" key to exit the MENU and return to the Main Display screen.

5.5.9 Select the instant flow rate unit



This function allows the user to select the instant flow rate units as either standard liters per minute (SLPM) or standard cubic feet per hour (SCFH). Following the steps mentioned above, at the MENU setting screen, use the "Up" or "Down" key to select F32 – UnT-F. Press the "M" key to confirm, and it will open the sub-MENU showing the current unit. Use the "Up" or "Down" keys and the "M" confirming key to select the desired option, and press the "M" key again to complete the task. The display will then return to the F32 – UnT-F screen, indicating the task is complete. Use the "Up" or "Down" key to select F99 – qUIT and the "M" key to exit the MENU and return to the Main Display screen.

5.5.10 Select the display mode



This function allows you to set the display mode, cycle through display modes, or switch to fixed display mode. If one likes to switch between these two display modes, following the steps mentioned above, at the MENU setting screen, use the "Up" or "Down" key to select F38 - dISP. Press the "M" key to confirm, and it will open the sub-MENU showing the current display mode. Use the "Up" or "Down" keys and the "M" confirming key to select the desired option, and press the "M" key again to complete the task. The display will then return to the F38 - dISP screen, indicating the task is complete. Use the "Up" or "Down" key to select F99 - qUIT and the "M" key to exit the MENU and return to the Main Display screen.

5.5.11 Select the display language



This function is reserved for future upgrades. The current models are configured to be English or Chinese based on the shipping geographic regions. However, if one likes to switch between these two default languages, following the steps mentioned above, at the MENU setting screen, use the "Up" or "Down" key to select F39 - LAnG. Press the "M" key to confirm, and it will open the sub-MENU showing the current language. Use the "Up" or "Down" keys and the "M" confirming key to select the desired option, and press the "M" key again to complete the task. The display will then return to

the F39 - LAnG screen, indicating that the task is complete. Use the "Up" or "Down" key to select F99 - qUIT and the "M" key to exit the MENU and return to the Main Display screen.



5.5.12 Open/close the valve

This function opens or closes the valve. If one likes to open or close the valve, follow the steps mentioned above. At the MENU setting screen, use the "Up" or "Down" key to select F43 - VALVE. Press the "M" key to confirm, and it will open the sub-MENU showing the current valve status. Use the "Up" or "Down" keys and the "M" key to confirm your selection. Here, "on" means valve open and "off" indicates valve closed. Then press the "M" key again to complete the task. The display will then return to the F43 - VALVE screen, indicating that the task is complete. Use the "Up" or "Down" key to select F99 - qUIT and the "M" key to exit the MENU and return to the Main Display screen.

Note: The valve is configured as a constant-open valve, or its default status is open (on). A constant-close valve can be an option; contact the manufacturer.

5.5.13 Set an alarm: upper instant flow rate limit

This function allows the user to set the instant flow rate above which the meter will trigger the alarm function. The alarm will trigger the screen/display to flash. The triggered alarm will not stop the meter from continuous operation. The alarm will be off once the metering value is below the set value.



The flow rate has two decimal points with a maximum not over the full-scale flow rate at the order. Following the steps mentioned above, at the MENU setting screen, use the "Up" or "Down" key to select F51 - ALm-H. Press the "M" key to confirm; it will open the sub-MENU, showing a default flow rate of 999.99. Use the "Up" or "Down" keys and the "M" confirming key to select the desired option, and press the "M" key again to complete the task. The display will then return to the F51 - ALm-H screen, indicating that the task is complete. Use the "Up" or "Down" key to select F99 - qUIT and the "M" key to exit the MENU and return to the Main Display screen.

5.5.14 Set an alarm: lower the instant flow rate limit

This function allows the user to set the instant flow rate below which the meter will trigger the alarm function. The alarm will trigger the screen/display to flash. The triggered alarm will not stop the

meter from continuous operation. The alarm will be off once the metering value is above the set value.

The flow rate has two decimal points with a minimum of 0.00. Following the steps mentioned above, at the MENU setting screen, use the "Up" or "Down" key to select F52 - ALm-L. Press the "M" key to confirm, and it will open the sub-MENU showing a default flow rate of 0.00. Use the "Up" or "Down" keys and the "M" confirming key to select the desired option, and press the "M" key again to complete the task. The display will then return to the F52 - ALm-L screen, indicating the task is complete. Use the "Up" or "Down" key to select F99 - qUIT and the "M" key to exit the MENU and return to the Main Display screen.

5.5.15 Set an alarm: accumulated flow rate or totalizer limit

This function allows the user to set the maximum accumulated or totalized flow rate above which the meter will trigger the alarm function. The alarm will trigger the screen/display to flash. The triggered alarm will not stop the meter from continuous operation. The alarm will be off by resetting the setting.

The accumulated or totalized flow rate has seven digits with a maximum of 9999999. Following the steps mentioned above, at the MENU setting screen, use the "Up" or "Down" key to select F53 - ALm-A. Press the "M" key to confirm; it will open the sub-MENU, showing a default flow rate of 9999999. Use the "Up" or "Down" keys and the "M" confirming key to select the desired option, and press the "M" key again to complete the task. The display will then return to the F53 - ALm-A screen, indicating the task is complete. Use the "Up" or "Down" key to select F99 - qUIT and the "M" key to exit the MENU and return to the Main Display screen.



5.5.16 Change the default password



For data safety, it is recommended that the default password of 11111 be changed when using this product for the first time.

Following the steps mentioned above, at the MENU setting screen, use the "Up" or "Down" key to select F91 - PASS. Press the "M" key to confirm; it will open the sub-MENU showing the default password 11111. Use the "Up" or "Down" keys and the "M" confirming key to select the desired option, and press the "M" key again to complete the task. The display will then return to the F91 - PASS screen, indicating the task is complete. Use the "Up" or "Down" key to select F99 - qUIT and the "M" key to exit the MENU and return to the Main Display screen.

Please keep the changed password in a safe yet accessible place. If it is unrecoverable, please contact the manufacturer to obtain a special password to access the meter's MENU.

5.5.17 Reset the accumulated or totalized flow rate



Because the maximum accumulated flow rate the internal register can hold is 9999999, the register will stop accumulating once that value is reached. At this time, it is necessary to reset this register. Following the steps mentioned above, at the MENU setting screen, use the "Up" or "Down" key to select F92 - CLr-A. Press the "M" key to confirm, and it will open the sub-MENU for resetting the value. Use the "Up" or "Down" keys to select, and the "M" key to confirm and execute. Press the "M" key again to complete the task. The display will then return to the F92-Clr-A screen, indicating the task is complete. Use the "Up" or "Down" key to select F99 - qUIT and the "M" key to exit the MENU and return to the Main Display screen.

5.5.18 Exit the MENU



At the MENU settings, use the "Up" or "Down" key to select the F99 - qUIT option and press the "M" confirming key to exit the MENU settings and return to the Main Display screen.

5.5.19 Sleeping mode

When the meter is powered by batteries, enable sleeping mode to save power and extend operation time.

The meter features an automatic sleep mode that shuts off the display, while the control circuitry operates with minimal power consumption. This mode will be executed when the continuously measured flow rate is zero for 5 minutes.

The meter can also be manually switched to sleep mode by pressing the "Up" key for 3 seconds.

5.5.20 Wake up the meter

When the meter is in sleeping mode, it will automatically wake up if the flow rate in the flow channel exceeds 0.5 L/min (1.1 SCFH or 0.03 m3/h) for 10 seconds. Alternatively, the meter can be manually activated by pressing any of the three keys on the front of the meter for 5 seconds.

5.5.21 MENU key sequence for the settings

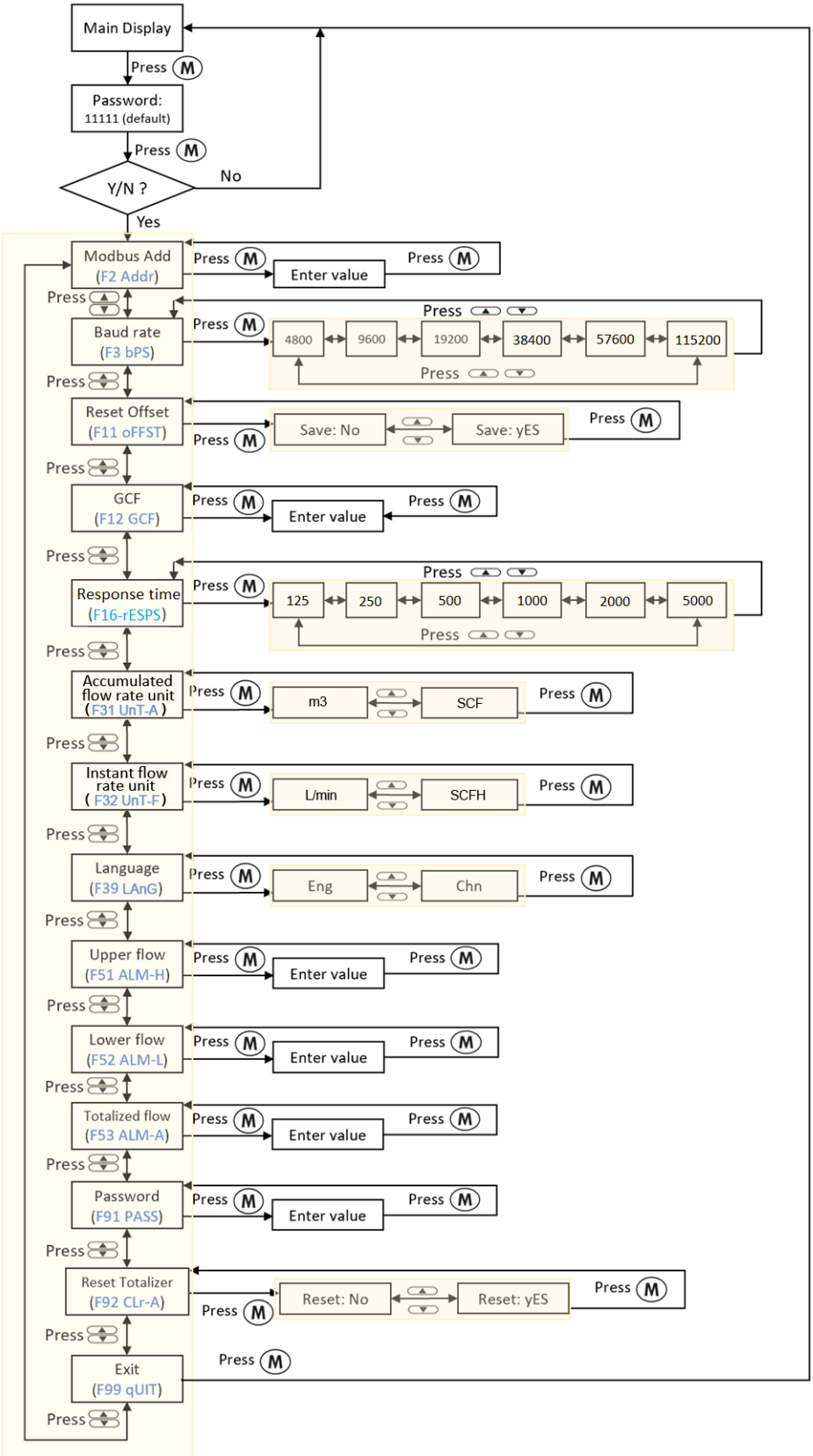

5.6 RS485 Modbus communication protocol

The digital communication protocol is based on standard Modbus RTU Half-plex mode. A master (PC or PLC) can communicate with multiple slaves (the current product) for data exchange and configuration of communication parameters.

5.6.1 Hardware connection

The hardware layer is TIA/EIA-485-A, as illustrated below. In this configuration, the product (MF5700) is a slave.

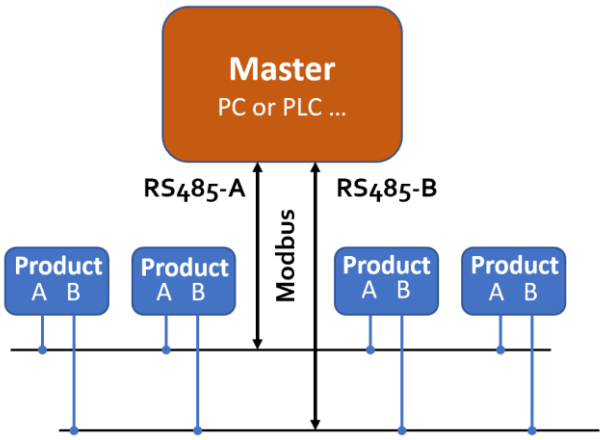

5.6.2 Communication parameters

The PC UART communication parameters are listed in the following table.

Parameters	Protocol
	RTU
Baud rate (Bits per second)	9600 bps
Start bits	1
Data bits	8
Stop bits	1
Even/Odd parity	None
Bits period	104.2 µsec
Bytes period	1.1458 msec
Maximum data length	20
Maximum nodes	247

5.6.3 Frame

The frame function is based on the standard Modbus RTU framing:

Start_bits	Address	Function codes	Data	CRC	Stop_bits
T1-T2-T3-T4	8 bit	8 bit	N 8 bit (20≥n≥0)	16 bit	T1-T2-T3-T4

Start_bits: 4 periods bit time, for a new frame.

Address: The address can be set from 1 to 247 except for 157 (0x9d). 0 is the broadcast address.

Function codes: Define the product (MF5700)'s functions/actions (slaves), either execution or response.

Data: The address of the register, the length of data, and the data themselves.

CRC: CRC verification code. The low byte is followed by the high byte. For example, a 16-bit CRC is divided into BYTE_H and BYTE_L. In the framing, the BYTE_L will come first, followed by the BYTE_H. The last one is the STOP signal.

Stop_bits: 4 periods bit time, for ending the current frame.

5.6.4 Function codes

The Modbus function codes used for the product are a subclass of the standard Modbus function codes. These codes are used to set or read the registers of the product:

Code	Name	Functions
0x03	Read register	Read register(s)
0x06	Set a single register	Write one single 16-bit register
0x10	Set multiple registers	Write multiple registers

5.6.5 Registers

The product (MF5700) has multiple registers available for assigning various functions. With these functions, the user can obtain data from products, such as product addresses and flow rates from the registers, or set product functions by writing the corresponding parameters.

The currently available registers are listed in the following table, and they may be customized by contacting the manufacturer. Where R: read; W: write-only; W/R: read and write.

Note: At the time of shipping, the write-protection function is enabled, except for the address and baud rate. Once the user completes the register value change, the write protection will be automatically re-enabled to prevent incidental data loss.

Functions	Description	Register	Modbus reference
Address	Product address (R/W)	0x0081	40130 (0x0081)
Serial number	Serial number of the product	0x0030 ~ 0x0035	40049 (0x0030)
Alarm information	Read the alarm information (R)	0x0037	40056 (0x0037)
Flow rate	Current flow rate (R)	0x003A ~ 0x003B	40059 (0x003A)
Accumulated flow	Accumulated or totalized flow rate (R)	0x003C ~ 0x003E	40061 (0x003C)
Temperature	Ambient temperature	0x003F	40064 (0x003F)
Baud rate	Communication (R/W)	0x0082	40131 (0x0082)
GCF *	Gas correction factor (R/W)	0x008B	40140 (0x008B)
Response time *	Set the response time (R/W)	0x008D	40142 (0x008D)
Totalizer alarm *	Accumulated/totalized flow rate alarm (R/W)	0x0096 ~ 0x0097	40151 (0x0096)
Upper flow alarm *	Upper flow rate limit alarm (R/W)	0x0098 ~ 0x0099	40153 (0x0098)
Lower flow alarm *	Lower flow rate limit alarm (R/W)	0x009A ~ 0x009B	40155 (0x009A)
Password *	Password change (R/W)	0x00AE ~ 0x00AF	40175 (0x00AE)
Offset calibration	Offset reset or calibration (W)	0x00F0	40241 (0x00F0)
Reset totalizer *	Reset accumulated or totalized flow rate (W)	0x00F2	40243 (0x00F2)
Valve status	Read/check the valve status	0x0037	40056 (0x0037)
Valve control*	Open/close (turn on/off) the valve	0x00F5	40246 (0x00F5)
Write protection	Write protection of selected parameters (W)	0x00FF	40256 (0x00FF)

Notes: 1, R – Read-only, W – Write only, R/W – Read and write.

2, For the * marked functions, please disable the write protection before executing the command.

3, Alarm information and valve status are in register 0x0037.

4, Valve status and valve control are available for the models with a valve.

The detailed information of each register is described below: Y: enabled; N: disabled

Flowmeter address	**0x0081**	**Write**	Y
		Read	Y
Description	Address of the product		
Value type	UINT 16		
Notes	Values range from 1 to 247, excluding 157 (0x9d). Broadcast address 0 is not enabled.		

SN, Serial number	**0x0030 ~ 0x0035**	**Write**	N
		Read	Y
Description	Series Number of the product, SN		
Value type	ASCII		
Notes	SN= value(0x0007), value(0x0008),….,value (0x000C); **e.g.,** Receiving 12 bits as: 0x2A47, 0x3741, 0x4549, 0x3032, 0x3035, 0x382A, the corresponding Serial Number is **G7AEI02058**.		

Alarm information	0x0037	Write	N
		Read	Y
Description	Read the alarm information.		
Value type	UINT 16		
Notes	Bit 13 - Upper flow alarm (0 - alarm not triggered, 1 - alarm triggered); Bit 14 - Lower flow alarm (0 - alarm not triggered, 1 - alarm triggered); Bit 15 - Totalizer alarm (0 - alarm not triggered, 1 - alarm triggered). **e.g.,** when the user reads "0x0012" (Bin: **101**0 0000 0000 0001) from register 0x0037. ➢ Upper flow alarm is triggered (bit 13 = 1); ➢ Lower flow alarm is not triggered (bit 14 = 0); ➢ The totalizer alarm is triggered (bit 15 = 1).		

Current flow rate	0x003A ~ 0x003B	Write	N
		Read	Y
Description	Current flow rate		
Value type	UINT 32		
Notes	Flow rate = [Value (0x003A)*65536 + value (0x003B)]/1000 **e.g.,** for a flow rate of 20.340 L/min, the user will read "0" from register 0x003A and "20340" from register 0x003B, therefore Current flow rate = (0*65536+20340)/1000 = 20.340		

Accumulated flow rate	0x003C ~ 0x003E	Write	N
		Read	Y
Description	Accumulated or totalized flow rate		
Value type	UINT 32 + UNIT 16		
Notes	Accumulated flow rate = Value (0x003C) * 65536 + Value (0x003D) + Value (0x003E)/1000 **e.g.,** For an accumulated flow rate of 3452.245 m^3, the user will read "0 (0x0000)" from register 0x003C; "3452 (0x0D7C)" from register 0x003D, and "245 (0x00F5)" from register 0x003E. Then, the accumulated flow rate = 0 + 3425 + 245/1000 = 3425.245.		

Temperature	0x003F	Write	N
		Read	Y
Description	Ambient temperature.		
Value type	UINT 16		
Notes	Ambient temperature = Value (0x003F) / 100 **e.g.,** for an ambient temperature of 23.45 °C, the user will read "2345 (0x0929)" from register 0x003F, therefore Ambient temperature = 2345/100 = 23.45		

Baud rate	0x0082	Write	Y
		Read	Y
Description	Communication baud rate with a PC		
Value type	UINT 16		
Notes	0 - 4800; 1 - 9600; 2 - 19200; 3 - 38400; 4 - 57600; 5 - 115200. The default value is 1, and the baud rate is 9600. For example, when the user reads "2 (0x0002)" from register 0x0082, the baud rate is 19200.		

GCF	0x008B	Write	Y
		Read	Y
Description	The gas conversion factor for a gas is different from the calibration gas.		
Value type	UINT 16		
Notes	The air (default) is 1000, usually read from register 0x008B. **The product will disable this function with write protection once the metering gas is confirmed with the proper GCF.** For a specific GCF value, please contact the manufacturer. **Notes: Please disable the write protection before executing this command.**		

Response time	0x008D	Write	Y
		Read	Y
Description	Set response time		
Value type	UINT 16		
Notes	125, 250, 500, 1000, 2000, or 5000, the unit is in milliseconds. The default value is 125 msec. **e.g.,** when the user reads "2000" from register 0x008D, the response time is 2000 msec (2 sec). **Notes: Please disable the write protection before executing this command.**		

Alarm: Accumulated flow rate	0x0096 ~ 0x0097	Write	Y
		Read	Y
Description	The alarm is set for the maximum value of an accumulated flow rate.		
Value type	UINT 32		
Notes	Alarm values = Value (0x0096)*65536 + Value (0x0097) When the set value is reached, an alarm will be triggered. **Notes: Please disable the write protection before executing this command.**		

Alarm: Flow rate upper limited	0x0098 ~ 0x0099	Write	Y
		Read	Y
Description	Set an alarm value for an upper flow rate limit.		
Value type	UINT 32		
Notes	Alarm values = [Value (0x0098)*65536 + Value (0x0099)]/1000 When the flow rate is above a set value, an alarm will be triggered. **Notes: Please disable the write protection before executing this command.**		

Alarm: Flow rate lower limit	0x009A ~ 0x009B	Write	Y
		Read	Y
Description	Set an alarm value for a lower flow rate limit.		
Value type	UINT 32		
Notes	Alarm values = [Value (0x009A)*65536 + Value (0x009B)]/1000 When the flow rate is below a set value, an alarm will be triggered. **Notes: Please disable the write protection before executing this command.**		

Change password	0x00AE ~ 0x00AF	Write	Y
		Read	Y
Description	Change the default password.		
Value type	UINT 32		
Notes	Password values = Value (0x00AE)*65536 + Value (0x00AF) Available: 00000 ~ 99999 **Notes: Please disable the write protection before executing this command.**		

Offset calibration	0x00F0	Write	Y
		Read	N
Description	Reset or calibrate the offset.		
Value type	UINT 16, Fixed value 0xAA55		
Notes	To reset or calibrate the offset, write 0xAA55 to register 0x00F0. **Notes: When you execute this function, make sure there is NO flow in the flow channel.**		

Reset the accumulated flow rate	0x00F2	Write	Y
		Read	N
Description	Reset the accumulated or totalized flow rate value.		
Value type	UINT 16, Fixed value 0x0001		
Notes	To reset the accumulated or totalized flow rate value, write 0x0001 to register 0x00F2. **Notes: Please disable the write protection before executing this command.**		

Valve status	0x0037	Write	N
		Read	Y
Description	Read the valve status.		
Value type	UINT 16		
Notes	Bit 0 - valve status (0 - closed, 1 - open); **e.g.,** when the user reads "0x0012" (Bin: 1010 0000 0000 0001) from register 0x0037. ➢ The valve is open (bit 0 = 1); ➢ The valve is closed (bit 0 = 0).		

Valve control	0x00F5	Write	Y
		Read	N
Description	Open/close (Turn on/off) the valve.		
Value type	UINT 16. Close valve: Fixed value 0x0001; Open valve: Fixed value 0x8001.		
Notes	To close (turn off) the valve, write 0x0001 to register 0x00F5. To open (turn on) the valve, write 0x8001 to register 0x00F5. **The valve is configured to be constant-open, i.e., the default status is open.** **Notes: Please disable the write protection before executing this command.**		

Write protection	0x00FF	Write	Y
		Read	N
Description	Write protection disabler for a set value to a specific register.		
Value type	UINT 16, Fixed value 0xAA55		
Notes	This function is enabled at the time of product shipment. To enable the write function for a specific parameter, such as GCF, the user needs to send 0xAA55 to register 0x00FF; the write function will then be enabled (write protection is disabled). After the write execution is completed, the firmware will automatically re-enable the write protection.		

6. Product selection and order information

The product part number consists of the product model number and suffixes indicating the full-scale flow rate, as well as other parameters. Refer to the following for details.

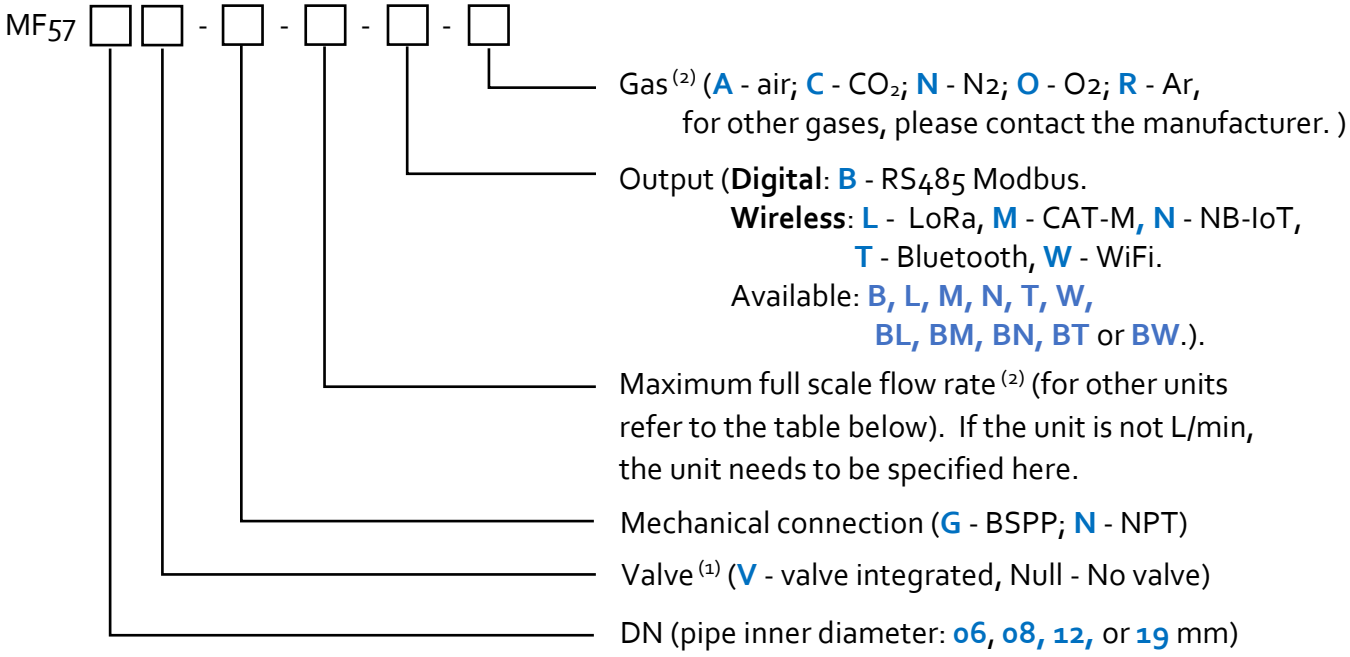

Table 6.1: Connection and maximum full-scale flow rate selection

Model	DN (mm)	Connection	Maximum full-scale flow rate	
			L/min	SCFH
MF5706 / MF5706V	6.0	BSPP 1/4" or NPT 1/4"	20	40
MF5708 / MF5708V	8.0	BSPP 3/8" or NPT 3/8"	100	200
MF5712	12.0	BSPP 1/2" or NPT 1/2"	250	500
MF5712V			150	300
MF5719	19.0	BSPP 3/4" or NPT 3/4"	500	1000

Notes: 1. For the valve-integrated version (MF5706V, MF5708V, and MF5712V), gas pressure should be >= 0.6MPa.

2, For CO_2 measurement, real gas calibration is required.

Table 6.2: Units conversion table

L/min	SCFH	NCMH		L/min	SCFH	NCMH
20	42.38	1.20		18.88	**40**	1.13
100	211.9	6.00		94.40	**200**	5.66
250	529.7	15.0		236.0	**500**	14.16
500	1059	30.0		471.9	**1000**	28.32

7. Technical specifications

All specifications listed in the following table, unless otherwise noted, apply for calibration conditions at 20°C and 101.325 kPa absolute pressure with air. The product is horizontally mounted during calibration.

	MF5706	MF5708	MF5712	MF5719	Unit
Full-scale flow range					
No valve version	0 ~ 20	0 ~ 100	0 ~ 250	0 ~ 500	L/min
Valve integrated version (1)	0 ~ 20	0 ~ 100	0 ~ 150		
Accuracy	±(2.0+0.5FS)				%
Repeatability	(0.5+0.15FS)				%
Turn-down ratio	80:1				
Response time	<2.0				sec
Working temperature	-10 ~ +55				°C
Maximum pressure	0.8				MPa
Humidity	<95, no condensation				%RH
Maximum overflow	100	200	400	800	L/min
Maximum flow change	15	30	60	120	L/min/sec
Pressure loss (2)	0.6	1.0	2.0	2.5	kPa
Power supply (3)	**Standard version:** 4-AA batteries (LR6) / 5 ~ 24 Vdc **Wireless version:** 5 ~ 24 Vdc **Valve integrated version:** 18 ~ 24 Vdc				
Power consumption	>60 (on batteries)				day
Power/data interface	USB Type-C				
Digital output	RS485 Modbus half-duplex				
Wireless options	LoRa / WIFI / NB-IoT / BT LE				
Display	LCD				
Resolution	0.01 L/min (instant) / 1 L (accumulated)				
Mechanical connection	BSPP 1/4 or NPT 1/4"	BSPP 3/8" or NPT3/8"	BSPP 1/2" or NPT 1/2"	BSPP 3/4" or NPT 3/4"	
Storage temperature	-20 ~ +70				°C
Reference conditions	20°C, 101.325 kPa, air				
Protection	IP50				
Fluid compatibility	Non-corrosive				
CE	EN61326-1; -2; -3				

Notes: 1. The full-scale range of MF5712V is 150 SLPM

2. The pressure loss is for the version without a valve.

3. The wireless version and valve-integrated version will not work with batteries.

8. Wetted materials and compatibility

The product flow channel is made of anodized aluminum alloy. Flow conditioner is made of Acrylonitrile Butadiene Styrene (ABS). The sensing element comprises silicon, silicon nitride, and silicon dioxide. The sensor chip surfaces are passivated with silicon nitride and silicon dioxide. The electronic sealing is provided by LOCTITE Ablestik 84-3J. Another wetted material that may be exposed is FR-4.

9. Technical notes for the product performance

9.1 Measurement principle

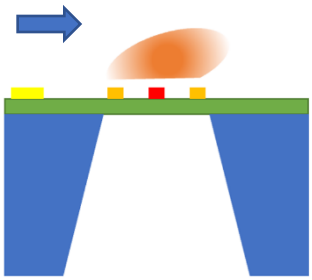

Figure 8.1: Measurement approach illustration.

The products utilize the Company's proprietary micro-machined (MEMS) thermal calorimetric sensing technology. A thermal signal generator (microheater) is placed on a thermally isolated membrane, with two thermistors symmetrically positioned with respect to the microheater. The flowing fluid carries heat away from the microheater, redistributing the temperature field as measured by the thermistors. The amount of heat carried by the flowing fluid is dependent on the fluid's mass as well as its thermal properties. By precisely gauging the change in the temperature field with a metrological reference standard, the fluid's mass flow rate can be established and reproduced.

After the circuitry temperature compensation and with the proper design of the MEMS sensing chip, including a pressure balancer that maintains membrane flatness under various fluidic pressure conditions, the calorimetric thermal sensing will guarantee pressure- and temperature-independent mass flow data acquisition. MEMS technology also enables mass production of sensing elements, significantly reducing costs compared to traditional thermal mass-flow sensing elements. It enables the current offer to provide superior value to users. For additional information, please refer to the company's US patents and other publicly available publications.

9.2 Precautions for the best performance of the product

9.2.1 Comparison with a third-party reference meter

Commonly, a user may compare the product's data with a third-party reference meter, and in many cases, discrepancies arise.

When performing such a comparison, please note that the reference meter should have more precisely specified accuracy (about 1/3 of the product), and pay special attention to differences in reading and full-scale accuracy.

A full-scale accuracy = reading accuracy x (full-scale flow rate/ set point (current) flow rate)

Another key point to comparing the different flow meters is that as long as the fluidic flow is a continuous flow without pulsation, then the fluid dynamics will have the system following the Bernoulli equation:

$$P_1 + \frac{1}{2}\rho v_1^2 + \rho g h_1 = P_2 + \frac{1}{2}\rho v_2^2 + \rho g h_2$$

Where ρ is the fluid density, g is the acceleration due to gravity, P1 is the pressure of the reference meter, P2 is the pressure at the test meter, v1 is the velocity of the reference meter, and v2 is the velocity of the test meter. h1 and h2 are the corresponding heights for the meters, which are generally the same in the system. Therefore, it would be critical to keep the system's pressure variation to a minimum. (This explains our recommendations for the installations in Section 4). Also, the meter measurement principle is often very important for the understanding of any discrepancies.

9.2.2 Particle contamination and fluidic cleanness

Any contamination, including particles and liquid vapor, would be detrimental to the accuracy of the flow measurement and to the meter's functionality. It is important to ensure that the applied flow medium is clean and dry. If any contamination is suspected, please allow experienced technical personnel to inspect and recondition it. Do not use a foreign cleanser or other fluids to clean the flow path, as this could cause irreparable damage.

9.2.3 Apply to a different gas medium

The product is calibrated using a high-precision, NIST-traceable metrological standard in clean, dry air. If the meter is used to measure another clean, dry gas, the correct gas conversion factor needs to be registered in the meter before the measurement.

The meter operates similarly to the principle described in the international standard for thermal mass flow meters (ISO 14511:2001 - Measurement of fluid flow in closed conduits — Thermal mass flowmeters). Due to the meter assembly procedure, the head loss value from the meter to the meter would not be 100% identical. Within the extensive dynamic measurement range, the thermal response would also exhibit deviations and nonlinearity from gas to gas. Therefore, measurements by the meter for a gas medium other than the calibration gas would exhibit larger measurement errors, particularly in the low-Reynolds-number range, where the laminar flow profile is sensitive.

10.Troubleshooting

Phenomena	Possible causes	Actions
No signal/display	The power is not connected; the battery is empty	Connect the power and then check the cable.
	Cable connection incorrect	Check the cable.
	No flow or clogging	Check flow and contamination.
	Power regulator failure	Return to the factory.
	Sensor failure	Return to the factory.
Significant errors or unexpected flow rate	Particles, fluid type	Check the system
Erroneous or large noise	Vibration, unstable flow	Check the system
Valve not work	Wire connection, valve	Return to the factory
Offset unstable	Circuitry instability	Check the system, power off
No digital interface	Wrong address, software	Check the commands and the connection
No wireless, BT cannot pair	Wrong model, data jam	Check the model, power off/on

11. Warranty and Liability

(Effective January 2018)

Siargo warrants that the products sold hereunder will be used appropriately and installed correctly under normal circumstances and service conditions. As described in this user manual, OEM products shall be free from faulty materials or workmanship for 180 days, and non-OEM products for 365 days, from the date of shipment. This warranty period is inclusive of any statutory warranty. Any repair or replacement of a serviced product shall be subject to the same terms of this warranty.

Siargo makes no warranty, representation, or guarantee and shall not assume any liability regarding the suitability of the products described in this manual for any purposes that are not specified in this manual. The users shall be held fully responsible for validating the performance and suitability of the products for their particular design and applications. For any misuse of the products outside the scope described herein, the user shall indemnify and hold Siargo and its officers, employees, subsidiaries, affiliates, and sales channels harmless from and against all claims, costs, damages, expenses, and reasonable attorneys' fees arising from any direct or indirect sources.

Siargo makes no other warranty, express or implied, and assumes no liability for any special or incidental damage or charges, including but not limited to any damages or charges due to installation, dismantling, reinstallation, etc., or any other consequential or indirect damages of any kind. To the extent permitted by law, the exclusive remedy of the user or purchaser, and the limit of Siargo's liability for any and all losses, injuries, or damages concerning the products, including claims based on contract, negligence, tort, strict liability, or otherwise shall be the return of products to Siargo, and upon verification of Siargo to prove to be defective, at its sole option, to refund, repair or replacement of the products. Regardless of form, no action may be brought against Siargo more than 365 days after the cause of action accrues. Products returned under warranty to Siargo shall be at the user's or purchaser's risk of loss and, if returned at all, at Siargo's risk of loss. Purchasers or users are deemed to have accepted this limitation of warranty and liability, which contains the complete and exclusive limited warranty of Siargo. It shall not be amended, modified, or its terms waived except by Siargo's sole action.

This manual's product information is believed to be accurate and reliable at the time of release or when it is made available to users. However, Siargo shall assume no responsibility for any inaccuracies and/or errors and reserves the right to make changes without further notice for the relevant information herein.

This warranty is subject to the following exclusions:

(1) Products that have been altered, modified, or have been subject to unusual physical or electrical circumstances, as indicated, but not limited to those stated in this document or any other actions which cannot be deemed as proper use of the products;

(2) Products that have been subject to chemical attacks, including exposure to corrosive substances or contaminants. In the case of battery usage, long-term discharge, or leakage-induced damage;
(3) Products that have been opened or dismantled for whatever reason;
(4) Products that have been subject to working conditions beyond the technical specification as described by this manual or related datasheet published by the manufacturer;
(5) Any damages incurred by the incorrect usage of the products;
(6) Siargo does not provide any warranty on finished goods manufactured by others. Only the original manufacturer's warranty applies.
(7) Products that are resold by unauthorized dealers or any third parties.

12. Service/order contact and other information

Siargo Ltd. is making every effort to ensure the quality of its products. For questions or product support, please contact your direct sales representative. If you need additional assistance, please contact customer service at the address listed below. We will respond to your request promptly and work with you to ensure your complete satisfaction.

For sales or product orders, please contact the local sales representatives or distributors listed on the company's webpage: www.Siargo.com.

For any returns, please contact your direct sales representative to obtain an RMA. If you need any further assistance, please contact info@siargo.com for additional information or a Return Materials Authorization (RMA) before shipping the product back to the factory for services such as calibration. Please specify the product's status in your email message as clearly as possible, indicate your intention to return it to the factory, and include your shipping address. Be sure to write the RMA on the returned package or include a letter with the RMA information.

Direct customer service request(s) should be addressed to

Siargo Ltd.
4677 Old Ironsides Drive, Suite 310,
Santa Clara, California 95054-1857, USA
Tel: +1(408)969-0368
Email: Info@Siargo.com

For further information and updates, please visit www.Siargo.com.

Appendix I. LoRa communication protocol

The LoRa protocol appends the LoRa base station's address and channel information before the Modbus command.

Example：

The base station (master device) sends a query command:

00 01 17 00 00 17 01 03 00 3A 00 02 E4 06

The device (slave device) replies:

00 01 17 01 03 04 00 00 00 00 FA 33

<table>
<tr><td colspan="9">Master (Base Station) Command Sent:</td></tr>
<tr><td colspan="9">00 01 17 00 00 17 01 03 00 3A 00 02 E4 06</td></tr>
<tr><td colspan="9">Device (Slave) Reply:</td></tr>
<tr><td colspan="9">00 01 17 01 03 04 00 00 00 00 FA 33</td></tr>
<tr><td colspan="9"></td></tr>
<tr><td colspan="9">Master Station Send Command Analysis</td></tr>
<tr><td colspan="4">LoRa Header</td><td colspan="5">MODBUS Communication Protocol</td></tr>
<tr><td>Device LoRa ID</td><td>Device Channel</td><td>Master LoRa ID</td><td>Master Channel</td><td>MODBUS Header (Fixed to 1)</td><td>Read Registers Command</td><td>Register Address</td><td>Number of Registers</td><td>CRC Check</td></tr>
<tr><td>00 01</td><td>17</td><td>00 00</td><td>17</td><td>01</td><td>03</td><td>00 3A</td><td>00 02</td><td>E4 06</td></tr>
<tr><td colspan="9">Device Reply Analysis</td></tr>
<tr><td colspan="4">LoRa Heade</td><td colspan="5">MODBUS Communication Protocol</td></tr>
<tr><td></td><td></td><td>Master LoRa ID</td><td>Master Channel</td><td>MODBUS Header (Fixed to 1)</td><td>Read Registers Command</td><td>Byte Count</td><td>Register Value</td><td>CRC Check</td></tr>
<tr><td></td><td></td><td></td><td>17</td><td>01</td><td>03</td><td>04</td><td>00 00 00 00</td><td>E4 06</td></tr>
</table>

Appendix II: Product evaluation kit

Siargo offers a product evaluation kit, including a digital data converter, USB data cable, and User Application software, that allows the user to evaluate the product performance on a Microsoft Windows-based computer. For some simple applications with digital data transfer, this kit could serve the purpose. The user can read and visualize the product's flow rate, obtain totalized values, and save the data for further analysis. It can read from up to 128 sensors via the RS485 serial interface.

For further information or to purchase the evaluation kit, please contact the manufacturer or a sales representative.

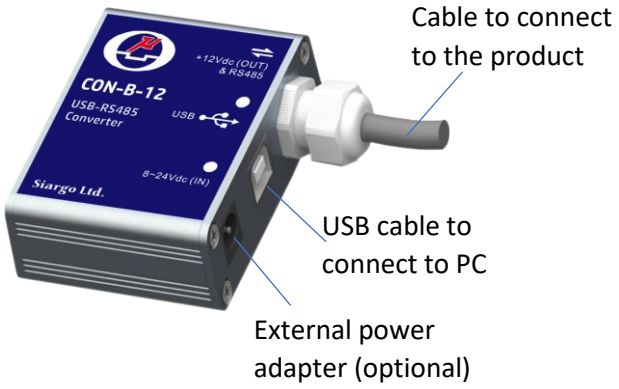

Each converter has a fixed cable that can be directly connected to the product. The USB cable connected to the PC is also included.

For most products, power from the PC via the USB cable will be sufficient; no external power will be required. However, for multiple sensors in series, the power from the USB cable may not be sufficient; an external power adapter with 8~24Vdc will be required.

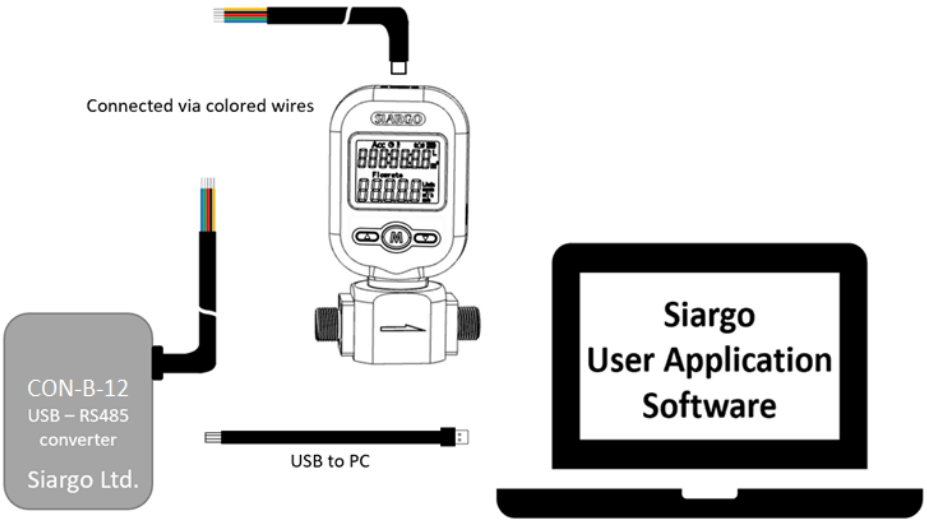

Appendix III: Document history

Revision VC.8.04 (March 2026)

- Add LoRa protocol information.

Revision VC.8.03 (August 2025)

- Corrections.

Revision VC.8.02 (October 2024)

- Add details for the current flow rate and the accumulated or totalized flow rate.

Revision VC.8.01 (July 2024)

- Minor correction.

Revision VC.8 (March 2024)

- Revised the power supply of both the wireless and valve-integrated versions.

Revision VC.7.02 (March 2024)

- Minor correction.

Revision VC.7.01 (June 2023)

- Update contact address.

Revision VC.7 (May 2023)

- Add MF5719 model.

Revision VC.6.01 (March 2023)

- Update the wireless communication section 5.4;
- Correct the alarm sound trigger option description in the MENU settings.

Revision VC.6 (July 2022)

- Added Units selection. (Section 5.5.8 / 5.5.9);
- Added temperature (Section 5.6);
- Update service contract information.

Revision VC.5 (April 2022)

- Update valve operation and make minor corrections to some descriptions.

Revision VC.4 (January 2022)

- Added the valve option.

Revision VC.3 (November 2021)

- Added the response time setting.
- Corrections.

Revision VC.2 (July 2021)

- Corrections.

Revision VC.1 (March 2021)

- The formal release of the 3rd generation products.

Revision VC.0 (September 2020)

- The first release of the 3rd generation products.