Siargo Ltd.



Mass flow controller VA.3.03

MFC2000

© 2025 Siargo Ltd.

www.Siargo.com

Gas Mass Flow Controller

With proprietary MEMS flow sensing technologies

MFC2000 Series

User Manual

Document No. 11-2025-MFC2 EN
Issue date 2025.11
Revision VA.3.03

Siargo Ltd.
4677 Old Ironsides Drive, Suite 310,
Santa Clara, California 95054-1857,
USA

Tel: +1(408)969-0368
Email: Info@Siargo.com

© Copyright 2025 by Siargo Ltd.
Siargo Ltd. and its subsidiaries reserve the right to change the specifications and/or descriptions without prior notice. For further information and updates, please visit: www.Siargo.com

Attention!

- Please carefully read this manual before operating this product.
- Do not open or modify any hardware that may lead to irrecoverable damage.
- Do not use this product if you suspect any malfunctions or defects.
- Do not use this product for corrosive media or in an environment with strong vibration
- Use this product according to the specified parameters.
- Only the trained or qualified personnel shall be allowed to perform product services.

Use with caution!

- Be cautious of electrical safety, even if it operates at a low voltage, any electrical shock might lead to some unexpected damages.
- The gas to be measured should be clean and free of particles.
  Do not apply this meter to a liquid medium.
- Do not apply for any unknown or non-specified gases that may damage the product.
- For remote data, please be sure the meter is properly configured.

Table of Contents

1. Overview 5
2. Receipt / unpack of the products 6
3. Knowing the products 7
   3.1 Product description 7
   3.2 Power and data cable description 7
   3.3 Mechanical dimensions 8
4. Installation 11
5. Operation 13
   5.1 Check the product specifications 13
   5.2 Check the leakage 13
   5.3 Power the product and digital data connection 13
   5.4 RS485 Modbus communication protocol 14
      5.4.1 Hardware connection 14
      5.4.2 Communication parameters 14
      5.4.3 Frame 15
      5.4.4 Function codes 15
      5.4.5 Registers 15
   5.5 Analog voltage (0 ~ 5 Vdc) output 20
6. Product selection 21
7. Technical specifications 24
   7.1 Specifications 24
   7.2 Pressure loss 25
8. Technical notes for the product performance 27
   8.1 Measurement principle 27
   8.2 Precautions for the best performance of the product 27
      8.2.1 Comparison with a third-party reference meter 27
      8.2.2 Particle contamination and fluidic cleanness 28
      8.2.3 Apply to a different gas medium 28

8.2.4 Re-calibration and maintenance 29
9. Troubleshooting 30
10. Warranty and Liability 31
11. Service/order contact and other information 33
Appendix I: Product evaluation kit 34
Appendix II: Remote operator interface 35
Appendix III: Document history 36

1. Overview

This manual provides essential information for the MFC2000 series of gas mass flow controllers for non-corrosive gas flow control applications with a full-scale mass flow rate of 50 mLn/min to 200 Ln/min. Both analog set point and RS485 Modbus interface are available for the mass flow control. The product performance, maintenance, troubleshooting, as well as information for product orders, technical support, and repair, are also included. Other standard communication options, such as DeviceNet, ProfiNet, EtherNet, EtherCat, IO-Link, etc., are available by contacting the manufacturer and will become standard offers in due course. These interfaces can also be further customized upon request.

The MFC2000 mass flow controller can be applied for process control of a 100:1 dynamic range. It works when working pressure is in the range of 0.1 to 1 MPa (15 to 150 PSI). The compensated temperature ranges are from 0 to 50°C.

The products are designed to allow easy change of mechanical connectors. The standard connectors are NPT 1/8" to 1/2"-female or BSPT 1/8" to 1/2"-female, and other customized connectors are available upon request.

The products are operated by Siargo's proprietary MEMS ***Thermal-D***™ calorimetric sensing technology together with smart control electronics. Compared to conventional calorimetric flow sensing technology on the market, this unique mass flow sensing technology eliminates the gas sensitivity of some gases with similar diffusivity and allows gas identification once programmed. The sensor surface is passivated with silicon nitride ceramic materials and water/oilproof nano-coating for performance and reliability. This technology also offers better linearity and improves temperature performance. It is the first of its kind in the industry as it can sense the mass flow of multiple gases without a manual gas conversion factor. As such, it allows high precision for gas process control with air calibration.

2. Receipt / unpack of the products

Upon receipt of the products, please check the packing box before dismantling the packing materials. Ensure no damage during shipping. If any abnormality is observed, please contact and notify the carrier who shipped the product. Please inform the distributors or sales representatives if the order is not placed directly with the manufacturer; otherwise, the manufacturer should be notified at the same time. For any further actions, please refer to the return and repair section in this manual.

If the packing box is intact, open it to find the product inside. The power and data cable (part number: DB9-2-100), as shown below, will also be found if it is included in the manufacturer's order.



Figure 2.1: MFC2000 DB9 Model



Figure 2.2: power and data cable DB9-2-100

Please immediately check the integrity of the product as well as the power and data cable. If any abnormality is identified, please notify the distributor/sales representative or manufacturer as soon as you can. If any defects are confirmed, an exchange shall be arranged immediately via the original sales channel. This user manual shall either be included in the packing box, or an electronic version shall be provided upon request online. In most cases, this manual will be made available to the customer before the actual order.

The standard cable (part number: DB9-2-100) has a DB9 connector with a length of 1.0 m. If another interface is ordered, the cable will be altered accordingly.

3. Knowing the products

3.1 Product description

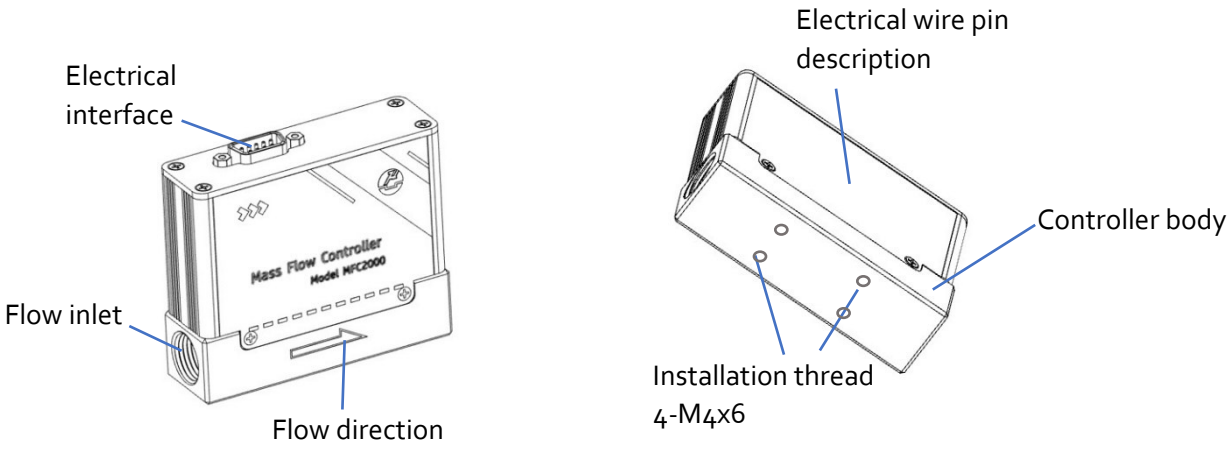

Figure 3.1: MFC2000 product with DB9 interface

3.2 Power and data cable description

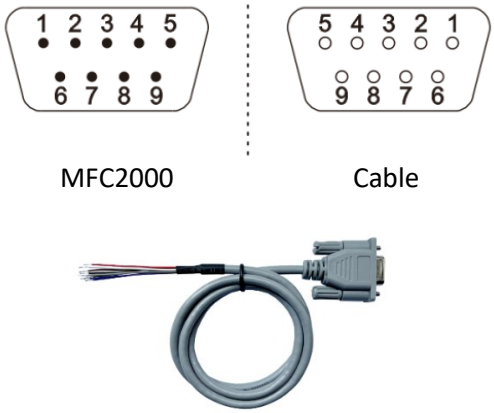

Figure 3.2: MFC2000 DB9 connection and cable

Table 3.1: MFC2000 DB9 pin/wire assignments.

Wire	Color	Definition
1	Purple	n/c
2	Red	n/c
3	White	RS485B (-)
4	Yellow	Setpoint, analog 0 ~ 5 Vdc or 4 ~ 20 mA
5	Black	RS485A (+)
6	Gray	Flow rate output, 0 ~ 5 Vdc or 4 ~ 20 mA
7	Brown	Power supply, (12 ~ 24) Vdc, 1A
8	Blue	Common
9	Green	Common

Note 1. The standard cable (part number: DB9-2-100) has a DB9 connector with a length of 1.0 meters. The other end for customer connection is open wires.

3.3 Mechanical dimensions

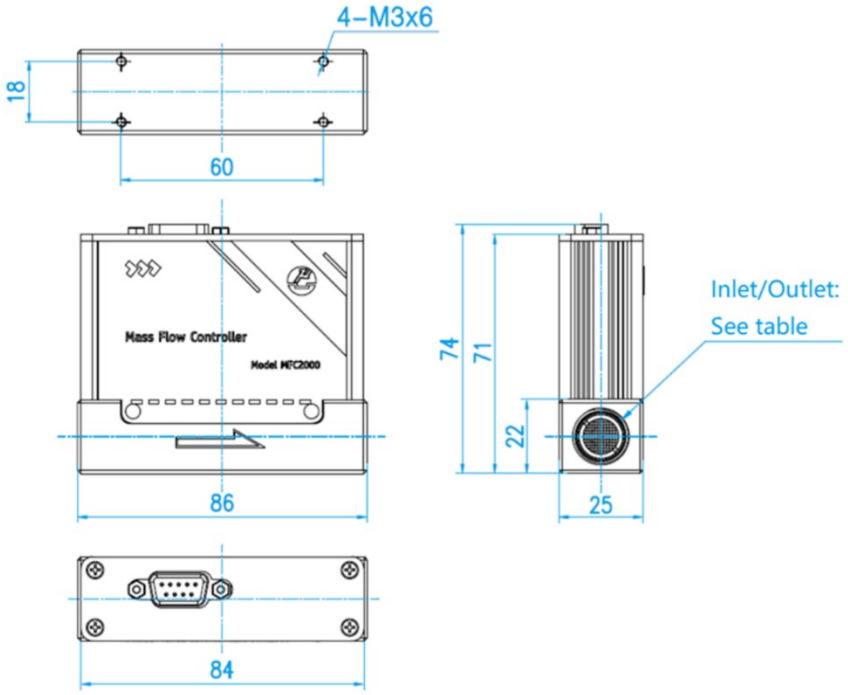

Figure 3.3: The MFC2000 dimensions for models with full-scale up to 20 Ln/min.

Maximum full-scale flow rate	Mechanical connection	L
0…50 mLn/min 0…100 mLn/min 0…200 mLn/min 0…500 mLn/min 0…750 mLn/min 0…1000 mLn/min / 0…1 Ln/min	**N1F** - NPT 1/8-Female	86
	N2F - NPT 1/4-Female	86
	U7 - 7/16-20UNF	86
	K1 - Double ferrule compression tube fitting 1/8"	133
	K2 - Double ferrule compression tube fitting 1/4"	138
	K3M - Double ferrule compression tube fitting φ3mm	132
	K6M - Double ferrule compression tube fitting φ6mm	138
	VCR2 - VCR 1/4"	134
0…2000 mLn/min / 0…2 Ln/min 0…5000 mLn/min / 0…5 Ln/min	**N2F** - NPT 1/4-Female	86
	U7 - 7/16-20UNF	86
	K1 - Double ferrule compression tube fitting 1/8"	133
	K2 - Double ferrule compression tube fitting 1/4"	138
	K3M - Double ferrule compression tube fitting φ3mm	132
	K6M - Double ferrule compression tube fitting φ6mm	138
	VCR2 - VCR 1/4"	134
0…10 Ln/min 0…20 Ln/min	**N3F** - NPT 3/8-Female	118
	U9 - 9/16-18UNF	86
	K2 - Double ferrule compression tube fitting 1/4"	138
	K3 - Double ferrule compression tube fitting 3/8"	141
	K4 - Double ferrule compression tube fitting 1/2"	145
	K6M - Double ferrule compression tube fitting φ6mm	138
	K10M - Double ferrule compression tube fitting φ10mm	141
	K12M - Double ferrule compression tube fitting φ12mm	150
	VCR2 - VCR 1/4"	134
	VCR4 - VCR 1/2"	142

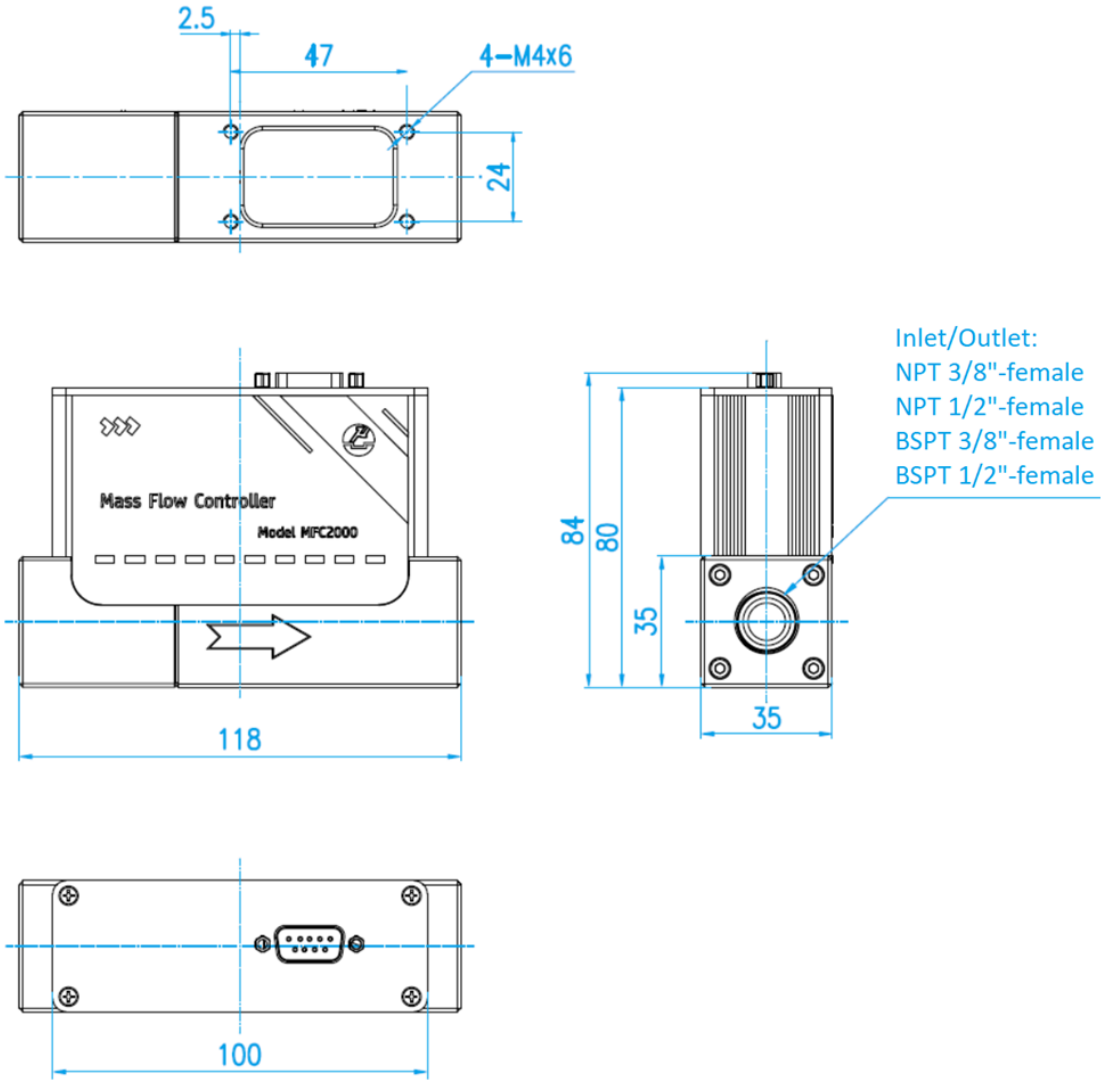

Figure 3.4: The MFC2000 dimensions for models with full-scale 50 and 100 Ln/min.

Maximum full-scale flow rate	Mechanical connection	L
0...50 Ln/min 0...100 Ln/min	**N3F** - NPT 3/8-Female	118
	N4F - NPT 1/2-Female	118
	U9 - 9/16-18UNF	118
	K2 - Double ferrule compression tube fitting 1/4"	170
	K3 - Double ferrule compression tube fitting 3/8"	173
	K4 - Double ferrule compression tube fitting 1/2"	177
	K6M - Double ferrule compression tube fitting φ6mm	170
	K10M - Double ferrule compression tube fitting φ10mm	173
	K12M - Double ferrule compression tube fitting φ12mm	182
	VCR2 - VCR 1/4"	166
	VCR4 - VCR 1/2"	174

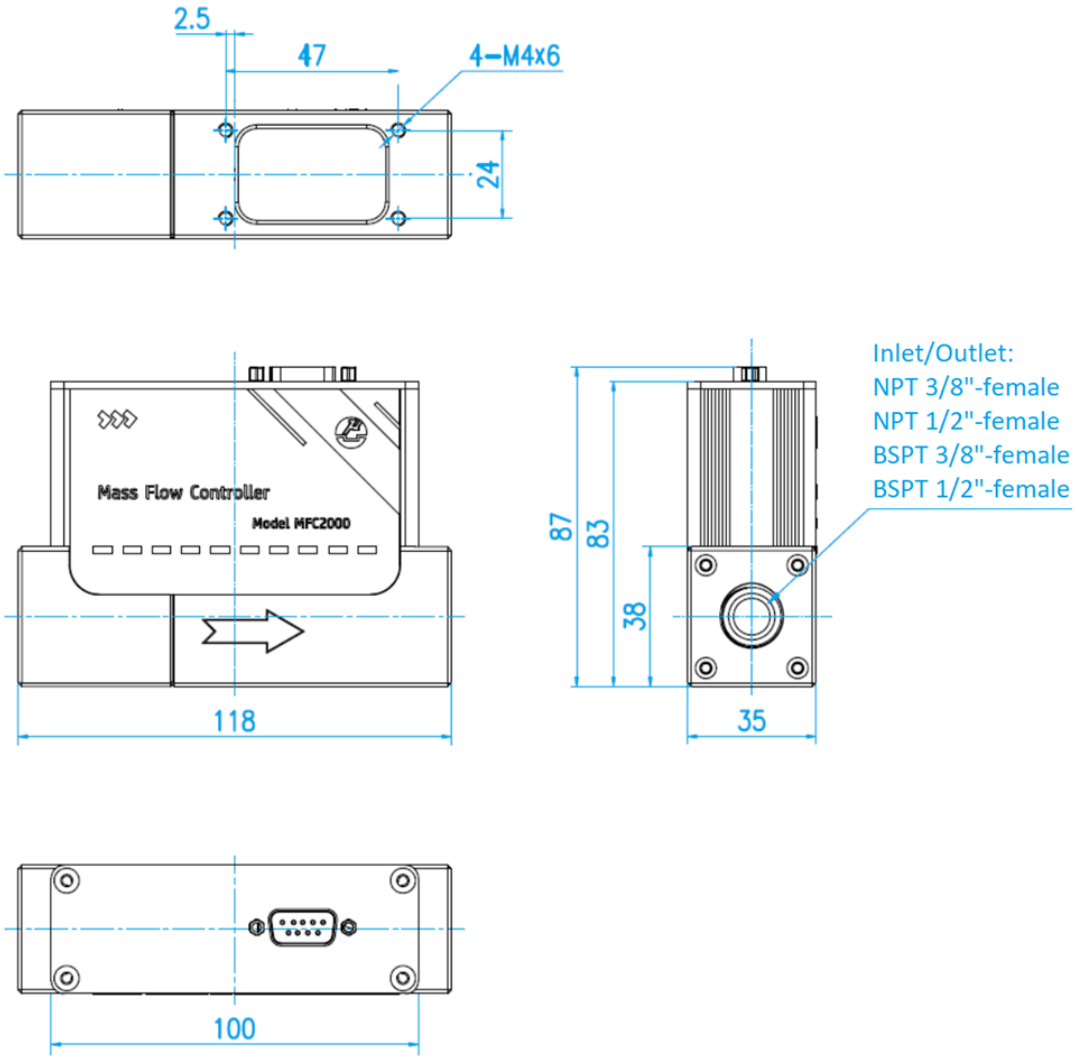

Figure 3.5: The MFC2000 dimensions for models with full-scale 200 Ln/min.

Maximum full-scale flow rate	Mechanical connection	L
0...200 Ln/min	**N3F** - NPT 3/8-Female	118
	N4F - NPT 1/2-Female	118
	U9 - 9/16-18UNF	118
	K2 - Double ferrule compression tube fitting 1/4"	170
	K3 - Double ferrule compression tube fitting 3/8"	173
	K4 - Double ferrule compression tube fitting 1/2"	177
	K6M - Double ferrule compression tube fitting φ6mm	170
	K10M - Double ferrule compression tube fitting φ10mm	173
	K12M - Double ferrule compression tube fitting φ12mm	182
	VCR2 - VCR 1/4"	166
	VCR4 - VCR 1/2"	174

4. Installation

Do not open or alter any part of the product that would lead to malfunction and irrecoverable damage. It will forfeit the terms of the warranty and liability. Check the application requirements and verify that they match the product specifications, particularly the gas compatibility and pressure/temperature ratings for safety reasons.

The product at the time of shipment is fully inspected for quality and meets all safety requirements. Additional safety measures should be applied during the installation. This includes but is not limited to leakage verification procedures, standard ESD (electrostatic discharge) precautions, and DC voltage precautions. Other tasks, such as calibration, part replacement, repair, and maintenance, must only be performed by trained personnel. Upon request, the manufacturer will provide necessary technical support and/or training for the personnel.

There are no preferred space directions for the installation. However, since the products are calibrated at the horizontal installation, vertical placement of the product may incur some minor offset if the products are calibration with a large dynamic range. When this happens, please apply the reset offset function described in this manual (Section 5) to ensure the offset is properly zeroed. The flow direction should be aligned with the arrow mark on the meter body. If the flowing fluid may have particles or debris, a filter is strongly recommended to be installed upstream of the meter.

The products have four mounting holes (threaded) located at the bottom of the products, as shown in Section 3.3.

The connection pipes or tubes should be clean and free of foreign materials. Gas compatibility must be observed for the proper performance of the products. The pipe or tube diameters should match those of the product to ensure there is no gas instability. Avoid installing pipes or tubes with a smaller diameter than that of the products. Otherwise, it may create strong flow instability. Particularly, at the laminar flow range, it will result in significant inaccuracy of the measurements.

If another valve or pressure regulator must be installed closer to the product, please keep them at a distance of at least 15 times the pipe diameter from the product.

Please follow the following steps to complete the installation:

a) Upon opening the package, the product's physical integrity should be inspected to ensure no visual damage.

b) Do not install this product in an environment with excessive vibration, noise, and or

c) Before installation of the product, please ensure that the pipe debris or particles, or any other foreign materials, are completely removed.

d) Close the upstream valve, if any, completely.

e) During installation, please make sure no foreign materials (such as water, oil, dirt, particles, etc.) enter the installation pipeline.

f) Make sure the power source is in the off status before connecting electrical wires per the wire definition in Table 3.1. Please ensure the power supply range (i.e., 12~24 Vdc, 1A) and power supply polarization. If an adapter is used, it must meet industrial standards and have all safety certifications.

g) For the data communication wire connection, please follow the description in Table 3.1 and make sure that the wires are correctly connected to the proper ports on your data device/equipment. Please ensure the data cable meets industrial standards with the necessary shielding.

h) Before starting a flow control process, make sure no leakage is present after the installation.

i) This will conclude the installation.



Cautions:

a) Don't alter any parts of the product.

b) Ensure the electrical connection is done correctly per the instructions.

c) Make sure no mechanical stresses in the connections.

d) The strong electromagnetic interference sources close by or any mechanical shocks at the pipeline may also lead to malfunctioning of the product.

5. Operation

5.1 Check the product specifications

Before using this product, verify the product specifications, which can be found in this manual or the basic information on the datasheet at the company's website www.Siargo.com.

The detailed product technical specifications can be found in Section 7. For a specific application, the product pressure rating must be lower than the system pressure. The flow range should also be within the specified range. The gas medium for the controller must also be consistent with that specified by the product. Be particularly cautious about the supplied voltage indicated in the specification. A higher voltage may lead to irreparable damage. A lower voltage will not power the product for any desired functions.

For the product's best performance, the gas to be applied must be clean and free of particles or other foreign materials.

5.2 Check the leakage

Check gas leakage in the pipe system before the operation. Pressurized nitrogen or air can be used for the leakage check, if available.

5.3 Power the product and digital data connection

Although this product complies with the CE-required EMC regulations, it also requires that the product be used with standard electrical device practices. Before connecting the product to external DC power, make sure the supply voltage is within the range specified in Section 7. Be cautious to observe standard electrical device precautions, such as ESD(electrostatic discharge) and DC voltage. Excessive electrostatic discharge may damage the product.

The manufacturer-supplied power and data cable has a locking fixture. Lock the cable so that it is properly engaged and will not accidentally be unplugged.

5.4 RS485 Modbus communication protocol

The digital communication protocol is based on standard Modbus RTU Half-plex mode. A master (PC or PLC) can communicate with multiple slaves (the current product) for data exchange and configuration of communication parameters. Refer to Table 3.1 for the cable connection.

5.4.1 Hardware connection

The RS485 hardware layer is TIA/EIA-485-A, as illustrated below. In this configuration, the product (MFC2000) is a slave.

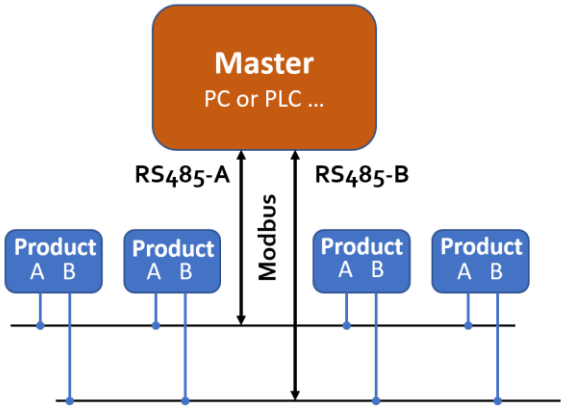

Figure 5.1: RS485 hardware

5.4.2 Communication parameters

The PC UART communication parameters are listed in Table 5.1.

Table 5.1: PC UART communication parameters

Parameters	Protocol
	RTU
Baud rate (Bits per second)	38400 bps
Start bits	1
Data bits	8
Stop bits	1
Even/Odd parity	None
Bits period	104.2 µsec
Bytes period	1.1458 msec
Maximum data length	20
Maximum nodes	247

5.4.3 Frame

The frame function is based on the standard Modbus RTU framing:

Table 5.2: frame function

Start_bits	Address	Function codes	Data	CRC	Stop_bits
T1-T2-T3-T4	8 bit	8 bit	N 8 bit (20≥n≥0)	16 bit	T1-T2-T3-T4

Start_bits: 4 periods of a bit time for a new frame.

Address: The address can be set from 1 to 247, except for 157 (0x9d). 0 is the broadcast address.

Function codes: Define the product's functions/actions (slaves), either execution or response.

Data: The address of the register, the length of data, and the data themselves.

CRC: CRC verification code. The low byte is followed by the high byte. For example, a 16-bit CRC is divided into BYTE_H and BYTE_L. The BYTE_L will come first in the framing, followed by the BYTE_H. The last one is the STOP signal.

Stop_bits: 4 periods of a bit time for ending the current frame.

5.4.4 Function codes

The Modbus function codes applied for the product are a subclass of the standard Modbus function codes. These codes are used to set or read the registers of the product:

Table 5.3: function codes

Code	Name	Functions
0x03	Read register	Read register(s)
0x06	Set a single register	Write one single 16-bit register
0x10	Set multiple registers	Write multiple registers

5.4.5 Registers

The product (MFC2000) has multiple registers with designed functions. The user can acquire data from the products, such as *product address* and *flow rates* from the registers, or set the product functions by writing the corresponding parameters.

The currently available registers are listed in the following table. The registers may be customized upon contacting the manufacturer. Where R: read; W: write-only; W/R: read and write.

Note: At the time of shipping, the write protection function is enabled except for the address and baud rate. Once the user completes the change in the register value, write protection will be automatically enabled again to prevent incidental data loss.

Table 5.4: Registers

Functions	Description	Register	Modbus
Address	Product address (R/W)	0x0081	40130 (0x0081)
Serial number	Serial number of the product (R)	0x0030 ~ 0x0035	40049 (0x0030)
Flow rate	Current flow rate (R)	0x003A ~ 0x003B	40059 (0x003A)
Baud rate	Communication baud rate (R/W)	0x0082	40131 (0x0082)
GCF *	Gas conversion factor (R/W)	0x008B	40140 (0x008B)
Digital filter depth *	Response time or sampling time (R/W)	0x008C	40141 (0x008C)
Setpoint source	Set the setpoint source (R/W)	0x00BA	40187 (0x00BA)
Setpoint	Set the flow rate in percentage of the full-scale flow (R/W)	0x00BB	40188 (0x00BB)
Setpoint flow	Read the current flow rate set by the user. (R)	0x00BC ~ 0x00BD	40189 (0x00BC)
P Gain	PLD proportional control of the valve/flow rate. (R/W)	0x00BE	40191 (0x00BE)
G Gain	PLD differential control of the valve/flow rate. (R/W)	0x00BF	40192 (0x00BF)
Valve preload offset	Default or preloaded valve opening. (R/W)	0x00C0	40193 (0x00C0)
Exhaust mode	Set the exhaust mode (R/W)	0x00C1	40194 (0x00C1)
Exhaust value	This option is for open-loop control. (R/W)	0x00C2	40195 (0x00C2)
Valve status	The value provides the percentage of the opened valve (R)	0x00C3	40196 (0x00C3)
Offset calibration	Offset reset or calibration (W)	0x00F0	40241 (0x00F0)
Write protection	Write protection of selected parameters (W)	0x00FF	40256 (0x00FF)

Notes: 1, R – Read-only, W – Write only, R/W – Read and write.

2, For the * marked functions, please disable the write protection before executing the command.

The detailed information on each register is described below: Y: enabled; N: disabled.

Address	**0x0081**	**Write**	Y
		Read	Y
Description	Address of the product		
Value type	UINT 16		
Notes	Values from 1 to 247 except for 157 (0x9d). The broadcast address is disabled, and the default address is 1.		

SN, Serial number	**0x0030 ~ 0x0035**	**Write**	N
		Read	Y
Description	Series Number of the product, SN		
Value type	ASCII		
Notes	SN= value(0x0030), value(0x0031),….,value (0x0035); Receiving 12 bits as 2A 41 31 42 32 33 34 35 36 2A, the corresponding Serial Number is **A1B23456**.		

Flow rate	0x003A ~ 0x003B	Write	N
		Read	Y
Description	Current flow rate		
Value type	UINT 32		
Notes	Flow rate = [Value (0x003A) * 65536 + value (0x003B)] / 1000 **Note: The unit is the same as the model number, mLn/min or Ln/min.** e.g., When the user reads "0" from register 0x003A and "20340" from register 0x003B, the current flow rate = (0 * 65536 + 20340) / 1000 = 20.340 mLn/min or Ln/min		

Baud rate	0x0082	Write	Y
		Read	Y
Description	Communication baud rate		
Value type	UINT 16		
Notes	0: baud rate=4800; 1: baud rate=9600; 2: baud rate=19200; 3 baud rate=38400. The default value is 3. e.g., when the user reads "3" from register 0x0082, the baud rate is 38400.		

GCF	0x008B	Write	Y
		Read	Y
Description	The gas conversion factor for the application gas, which is different from the calibration gas		
Value type	UINT 16		
Notes	The GCF of air is 1000 (default); it can be read from register 0x008B. **Note: The product will disable this function via write protection once the metering gas is confirmed to be the proper GCF. For the GCF values, contact the manufacturer.**		

Digital filter depth	0x008C	Write	Y
		Read	Y
Description	Digital filter depth setting		
Value type	UINT 16		
Notes	0 ~ 9 programmable, corresponding to 2^0 ~ 2^9 data sampling in the software filter. The default value is 3, corresponding to 2^3 = 8 data sampling.		

Setpoint source	0x00BA	Write	Y
		Read	Y
Description	Set the setpoint source.		
Value type	UINT 16		
Notes	Available valve modes: 0 and 1. 0 – analog control; 1 – digital control.		

Setpoint	0x00BB	Write	Y
		Read	Y
Description	Set the flow rate as a percentage of the full-scale flow, where 0 represents zero flow or 0%, and 64000 corresponds to the full scale of 100%. The default value is 0, or zero flow.		
Value type	UINT 16		
Notes	Available valve parameters: 0 ~ 65535. 0 ~ 64000 corresponding to 0% ~ 100%. 0 - 0%; 64000 - 100%.		

Setpoint flow	0x00BC ~ 0x00BD	Write	N
		Read	Y
Description	Read the user-set flow rate. The default value is 0.000 Ln/min with a resolution of 0.001 Ln/min.		
Value type	UINT 32		
Notes	Available valve parameters: 0 ~ 110000, i.e., 0 ~ 110.000 Ln/min.		

P Gain	0x00BE	Write	Y
		Read	Y
Description	PLD proportional control of the valve/flow rate		
Value type	UINT 16		
Notes	Available valve parameters: 0-9999. The default value is 15.		

G Gain	0x00BF	Write	Y
		Read	Y
Description	PLD differential control of the valve/flow rate		
Value type	UINT 16		
Notes	Available valve parameters: 0-9999. The default value is 25.		

Valve preload offset	0x00C0	Write	Y
		Read	Y
Description	Default or preloaded valve opening.		
Value type	UINT 16		
Notes	Available valve parameters: 0-9999. The default value is 2000.		

Exhaust mode	0x00C1	Write	Y
		Read	Y
Description	Set the exhaust mode.		
Value type	UINT 16		
Notes	Available valve control modes: 0 and 1. 0 - Valve in PD control 1 - Valve in open-loop control		

Exhaust value	0x00C2	Write	Y
		Read	Y
Description	This option is for open-loop control.		
Value type	UINT 16		
Notes	Available valve parameters: 0 ~ 10000. The default value is 10000, i.e., fully open.		

Valve status	0x00C3	Write	N
		Read	Y
Description	This option is for open-loop control The value provides the percentage of the opened valve		
Value type	UINT 16		
Notes	Available valve parameters: 0 ~ 65535. 0 ~ 65535 corresponding to 0% ~ 100%. 0 - fully closed or 0%; 65535 - fully open or 100%.		

Offset calibration	0x00F0	Write	Y
		Read	N
Description	Reset or calibrate the offset.		
Value type	UINT 16, Fixed value 0xAA55		
Notes	To reset or calibrate the offset, write 0xAA55 to register 0x00F0. **Note: When executing this function, ensure there is NO flow in the flow channel.**		

Write protection	0x00FF	Write	Y
		Read	N
Description	Write protection disabler for a specific register to a set value.		
Value type	UINT 16, Fixed value 0xAA55		
Notes	This function is enabled at the time of product shipment. The write function of a specific parameter, such as GCF or offset, can be enabled by sending 0xAA55 to register 0x00FF. After that, the write function will be enabled (write protection is disabled). After the write execution completes, the firmware will automatically re-enable write protection.		

5.5 Analog voltage (0 ~ 5 Vdc) output

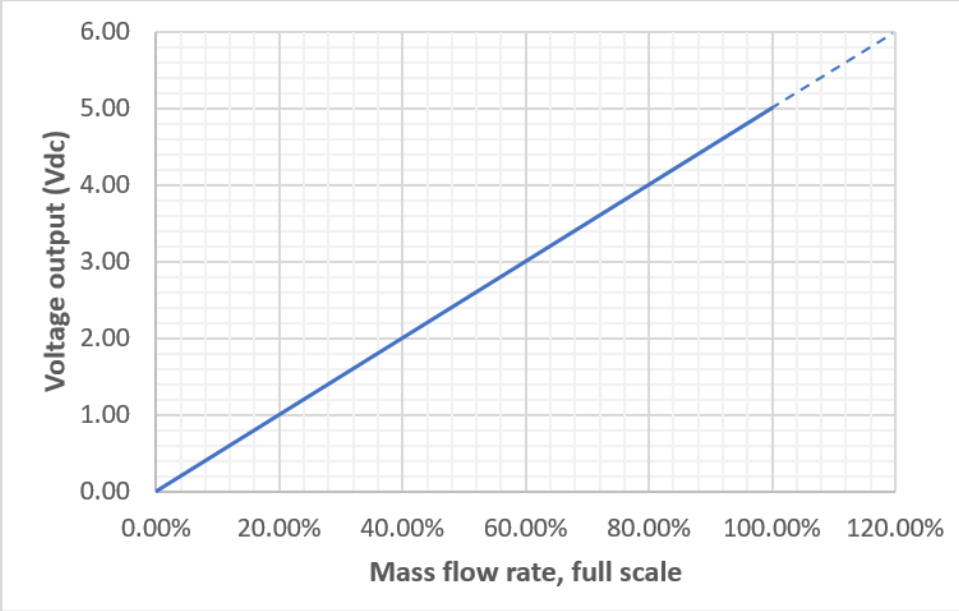

Figure 5.2: Analog output.

6. Product selection

The product part number consists of the product model number and suffixes indicating the full-scale flow rate and other parameters. Refer to the following for details.

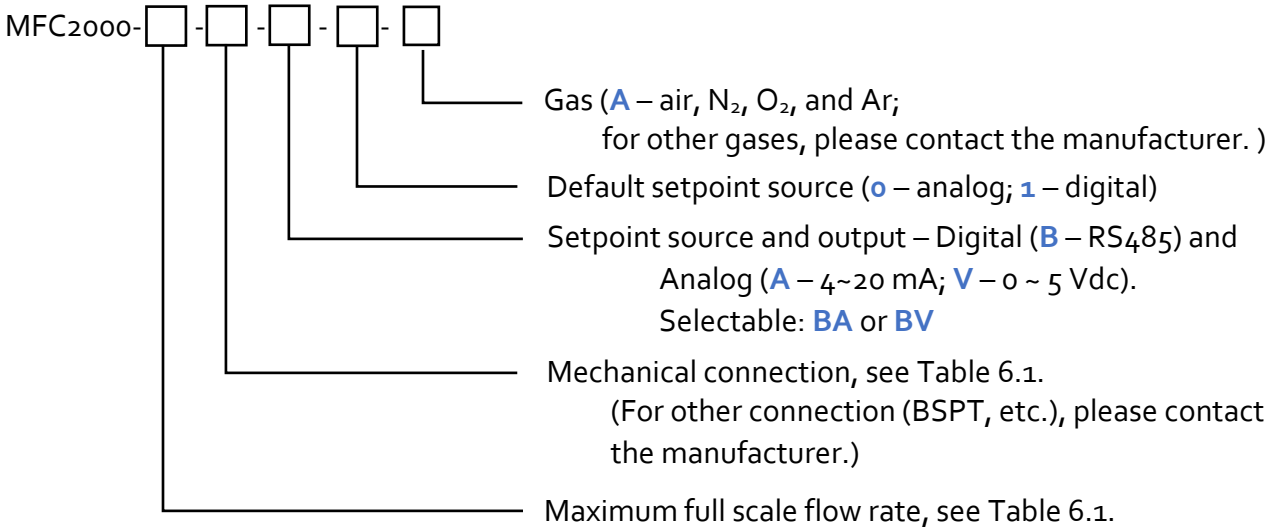

Table 6.1: Maximum full-scale flow rate and mechanical connection.

Maximum full-scale flow rate		Mechanical connection
0050	0…50 mLn/min	**N1F** - NPT 1/8-Female **N2F** - NPT 1/4-Female **U7** - 7/16-20UNF **K1** - Double ferrule compression tube fitting 1/8" **K2** - Double ferrule compression tube fitting 1/4" **K3M** - Double ferrule compression tube fitting φ3mm **K6M** - Double ferrule compression tube fitting φ6mm **VCR2** - VCR 1/4"
0100	0…100 mLn/min	
0200	0…200 mLn/min	
0500	0…500 mLn/min	
0750	0…750 mLn/min	
1000 / 001	0…1000 mLn/min / 0…1 Ln/min	
2000 / 002	0…2000 mLn/min / 0…2 Ln/min	**N2F** - NPT 1/4-Female **U7** - 7/16-20UNF **K1** - Double ferrule compression tube fitting 1/8" **K2** - Double ferrule compression tube fitting 1/4" **K3M** - Double ferrule compression tube fitting φ3mm **K6M** - Double ferrule compression tube fitting φ6mm **VCR2** - VCR 1/4"
5000 / 005	0…5000 mLn/min / 0…5 Ln/min	

010 **020**	0…10 Ln/min 0…20 Ln/min	**N3F** - NPT 3/8-Female **U9** - 9/16-18UNF **K2** - Double ferrule compression tube fitting 1/4″ **K3** - Double ferrule compression tube fitting 3/8″ **K4** - Double ferrule compression tube fitting 1/2″ **K6M** - Double ferrule compression tube fitting φ6mm **K10M** - Double ferrule compression tube fitting φ10mm **K12M** - Double ferrule compression tube fitting φ12mm **VCR2** - VCR 1/4″ **VCR4** - VCR 1/2″
050 **100** **200**	0…50 Ln/min 0…100 Ln/min 0…200 Ln/min	**N3F** - NPT 3/8-Female **N4F** - NPT 1/2-Female **U9** - 9/16-18UNF **K2** - Double ferrule compression tube fitting 1/4″ **K3** - Double ferrule compression tube fitting 3/8″ **K4** - Double ferrule compression tube fitting 1/2″ **K6M** - Double ferrule compression tube fitting φ6mm **K10M** - Double ferrule compression tube fitting φ10mm **K12M** - Double ferrule compression tube fitting φ12mm **VCR2** - VCR 1/4″ **VCR4** - VCR 1/2″

*The four-digit number is for mLn/min, whereas the three-digit number is for Ln/min.

* For other ranges, please specify, for example, 0…50 mLn/min; the full-scale will be 0050; others, please get in touch with the manufacturer.

Table 6.2: Setpoint source, output, and default setpoint source.

Setpoint source and output	Default setpoint source	Description
BA	**0**	The setpoint source and output are 4~20 mA and RS485, respectively, with 4~20 mA as the default setpoint source.
	1	The setpoint source and output are 4~20 mA and RS485, respectively, with RS485 as the default setpoint source.
BV	**0**	The setpoint source and output are 1~5 Vdc and RS485, respectively, with 1~5 Vdc as the default setpoint source.
	1	The setpoint source and output are 1~5 Vdc and RS485, respectively, with RS485 as the default setpoint source.

For example, MFC2000-0100-N1F-BV-0-A is a model for 0...100 mLn/min, with NPT 1/8" female connector, setpoint source, and output analog 0 ~ 5 Vdc and digital RS485 Modbus, default setpoint source analog (0 ~ 5 Vdc), and applicable for air, nitrogen, oxygen, or argon.

MFC2000-100-N3F-BV-1-A is a model for 0...100 Ln/min, with NPT 3/8" female connector, setpoint source, and output analog 0 ~ 5 Vdc and digital RS485 Modbus, default setpoint source digital (RS485 Modbus), and applicable for air, nitrogen, oxygen, or argon.

For other interfaces, such as DeviceNet, ProfiNet, IO-Link, etc., please contact the manufacturer. These interfaces will be the standard offer in due course. Please check back at www.Siargo.com for updates and additional information.

7. Technical specifications

7.1 Specifications

All specifications listed in the following table, unless otherwise noted, apply for calibration conditions at 0 °C and 101.325 kPa absolute pressure with air. The product is horizontally mounted during calibration.

	Value	Unit
Full-scale range	0 ~ 50 mLn/min ... 0 ~ 5000 mLn/min 0 ~ 1 ... 0 ~ 200 Ln/min	
Accuracy	± 1.0% r.d. (20 ~ 100% of full scale) ±0.2% f.s. (<20% of full scale)	
Repeatability	± 0.3% r.d. (20 ~ 100% of full scale) ±0.06% f.s. (<20% of full scale)	
Turn-down ratio	100:1	
Max control range	102	%FS
Control pressure range	0.1~0.8 (<20 Ln/min) 0.1~0.7 (50...200 Ln/min)	MPa
Maximum operating differential pressure	0.4	MPa
Setpoint source (input signal)	Analog: 0~5 Vdc or 4~20 mA; Digital: RS485	
Settling time (typical)	100	msec
Working temperature	0 ~ 55	°C
Humidity	<95, no condensation	%RH
Burst pressure	1.5	MPa
External leakage rate	≤1 x 10^{-9} (He)	Pa·m^3 /s
Power supply	(12 ~ 24) Vdc, 1A	
Output signal	Analog: 0~5 Vdc or 4~20 mA; Digital: RS485	
Max null shift (analog)	±30	mVdc
Control valve	Normally Closed (NC)	
Electrical connector	DB9	
Mechanical connection	7/16-20UNF...9/16-18 UNF, Compression tube fitting 1/8"~1/2", or VCR 1/4"~1/2"	
Protection	IP40	
Storage temperature	-20 ~ +70	°C
Reference conditions	0 °C, 101.325 kPa, air	
Fluid compatibility	Non-corrosive	
CE	EN61000-2; -3; -4	
Compliance	RoHS, REACH	

7.2 Pressure loss

7.2.1 50/100/200 mLn/min

Flow rate (mLn/min)	Pressure loss (kPa)
0	0.0
20	0.3
50	0.9
100	2.0
150	3.5
200	5.4

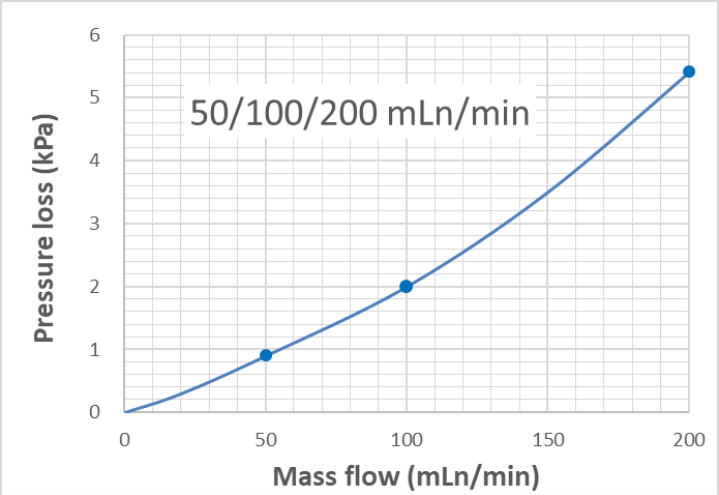

7.2.2 500/750/1000 mLn/min (1 Ln/min)

Flow rate (mLn/min)	Pressure loss (kPa)
0	0.0
100	1.0
200	2.3
500	77.5
750	13.7
1000	21.0

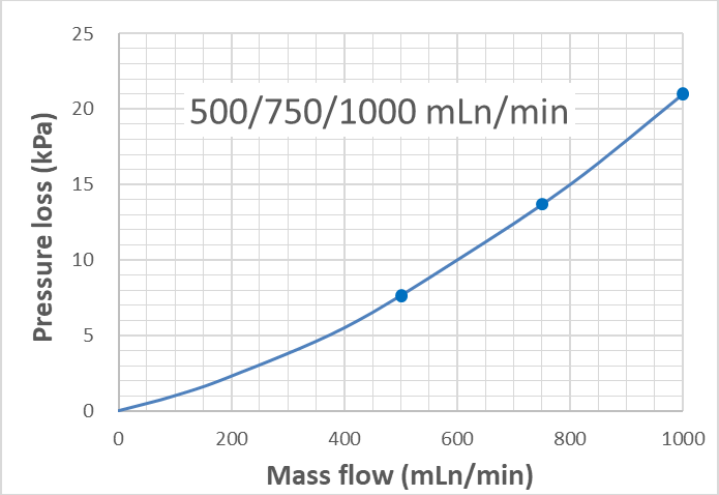

7.2.3 2000/5000 mLn/min (2/5 Ln/min)

Flow rate (mLn/min)	Pressure loss (kPa)
0	0.0
500	0.7
1000	1.8
2000	5.5
3000	11.5
4000	20.5
5000	32.0

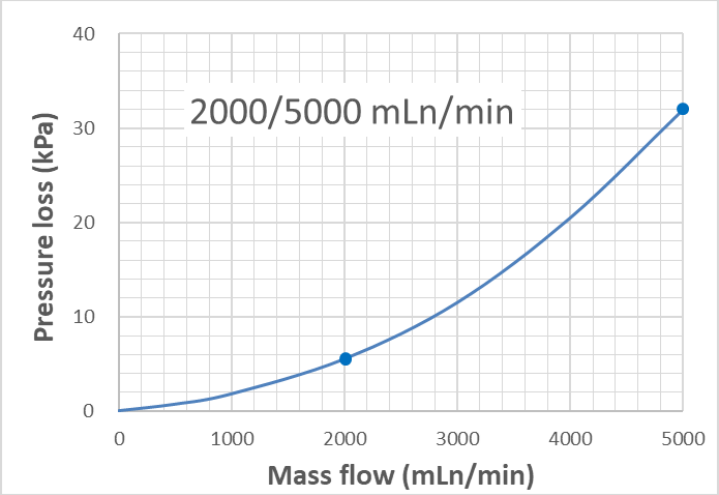

7.2.4 10/20 Ln/min

Flow rate (Ln/min)	Pressure loss (kPa)
0	0.0
2.5	2.0
5	7.0
10	27.0
15	58.0
20	100.0

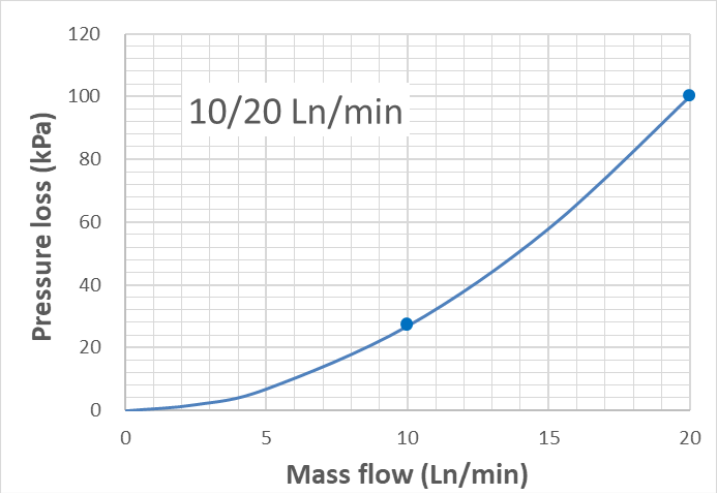

7.2.5 50/100 Ln/min

Flow rate (Ln/min)	Pressure loss (kPa)
0	0.0
10	2.0
20	7.0
40	26.0
50	38.0
60	53.0
80	85.0
100	120.0

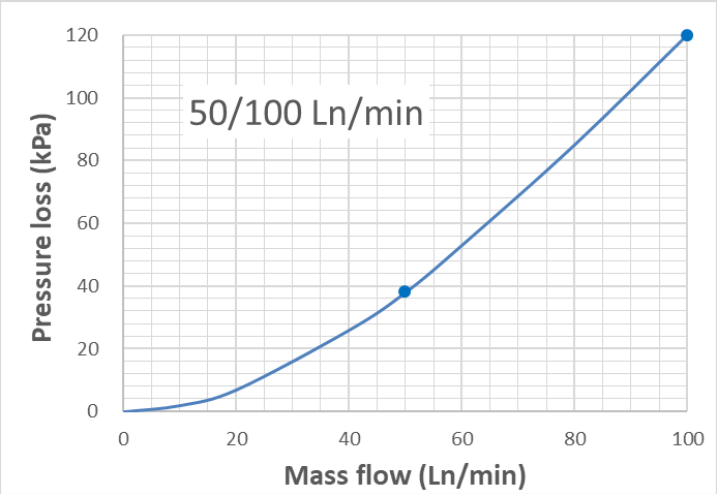

7.2.6 200 Ln/min

Flow rate (Ln/min)	Pressure loss (kPa)
0	0.0
25	3.0
50	12.0
100	40.0
150	76.0
200	118.0

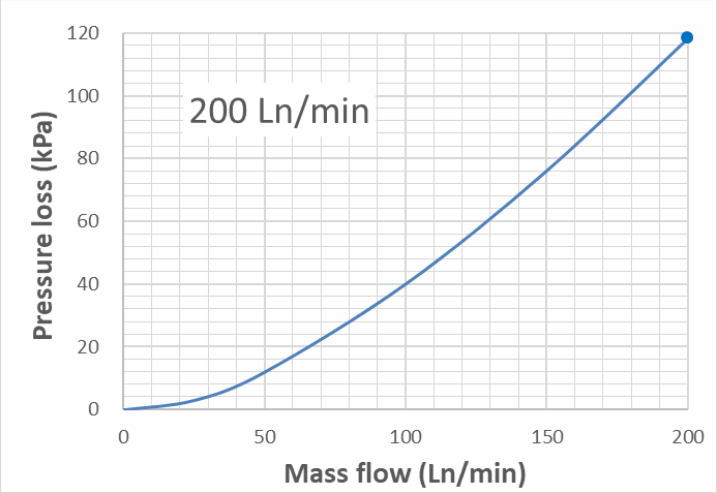

8. Technical notes for the product performance

8.1 Measurement principle

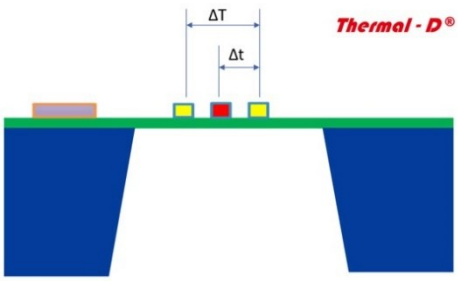

Figure 8.1: Measurement approach illustration.

The products utilize the Company's proprietary micro-machined (MEMS) thermal calorimetric sensing in time-domain data with a data processing algorithm. A thermal signal generator (microheater) with a pair of sensing elements is precisely manufactured upstream and downstream, separated by predefined micrometer distances on the chip surface, under excellent thermal isolation. When a fluid flows through the sensing chip, the fluid carries the thermal signal downstream. The sensing elements register the amplitude, time, and temperature differences. It calculates the thermal diffusivity and further correlates with the fluid mass flow rate during the calibration process.

This unique thermal sensing approach offers an extensive dynamic range with better performance against environmental parameter alternations. It is the first of its kind in the industry, which allows gas property-independent mass flow measurements for gases with similar thermal diffusivities. It significantly simplifies process control with high precision and easy maintenance. Please refer to the company's USA patents and other publications made available to the public for additional information.

8.2 Precautions for the best performance of the product

8.2.1 Comparison with a third-party reference meter

It is common practice to compare product data with a third-party reference meter, but in many cases discrepancies can occur.

When performing such a comparison, please note that the reference meter should have a higher-precision accuracy (approximately one-third of that specified by the product), and pay special attention to differences in reading and full-scale accuracy.

A full-scale accuracy = reading accuracy x (full-scale flow rate/ set point (current) flow rate)

Another key point to comparing the different flow meters is that as long as the fluidic flow is a continuous flow without pulsation, then the fluid dynamics will have the system following the Bernoulli equation:

$$P_1 + \frac{1}{2}\rho v_1^2 + \rho g h_1 = P_2 + \frac{1}{2}\rho v_2^2 + \rho g h_2$$

Where ρ is the fluid density, g is the acceleration due to gravity, P_1 is the pressure of the reference meter, P_2 is the pressure at the test meter, v_1 is the velocity of the reference meter, and v_2 is the velocity of the test meter. h_1 and h_2 are the corresponding heights for the meters, which are often the same in the system. Therefore, it will be essential to ensure the system has no pressure variation. (This explains our recommendations for the installations in Section 4). In addition, the meter measurement principle is often the key to understanding any discrepancies.

Please note that for comparison with a rotameter, the reading can have large deviations due to differences in measurement principles. Particularly, a rotameter is sensitive to pressure and temperature variations.

8.2.2 Particle contamination and fluidic cleanness

Any contamination, including particles and liquid vapors, would be detrimental to the accuracy of the flow measurement and the meter's functionality. It is critical to ensure that the applied flow medium is clean and dry. If contamination is suspected, please allow experienced technical personnel to check and recondition it. Do not use foreign cleansers or other fluids to clean the flow path, as they could cause irreparable damage.

8.2.3 Apply to a different gas medium

The product is calibrated using a high-precision NIST-traceable metrological standard and clean and dry air. Thanks to the unique thermal sensing technology, the product can be applied to meters and control other clean, dry gases with similar thermal diffusivities without sacrificing accuracy. It has effectively resolved the nonlinearity issues encountered when applying a gas conversion factor in calorimetric sensing, enabling highly accurate measurements with a large dynamic range. Applicable gases include air, N_2, O_2, Ar, CH_4, and CO.

This innovative product also follows the basic sensing principle described in the international standard for thermal mass flow meters (ISO 14511:2001 — Measurement of fluid flow in closed conduits — Thermal mass flow meters). For gases with different diffusivities, a gas conversion factor could be applied. For more information, contact your sales representative or manufacturer.

Under normal operation conditions, the wetted materials are fully compatible with common gases, such as air, oxygen, nitrogen, argon, and carbon dioxide. If a special gas is used, please check the manufacturer's gas compatibility data. In some cases, packing materials may need to be changed for gas compatibility, or additional hazardous zone certification will be required before the products can be used.

8.2.4 Re-calibration and maintenance

Controller recalibration depends on usage and application requirements. Therefore, it is a decision by the applications.

If preferred, Siargo can offer free calibration software or a user application kit to facilitate the customer's calibration requirements. Alternatively, contact your sales representative or contact the manufacturer for assistance. Siargo calibrates all products with NIST (National Institute of Standards and Technology, USA) traceable calibrators.

For maintenance, the services must be performed by trained or certified technicians by Siargo. Any changes to the products will void the product warranty. It could lead to irreparable damage to the products and cause unexpected injuries.

The products do not require regular maintenance if the specified application conditions are exactly observed. Maintenance is required if contamination or malfunctions are confirmed. In this case, contact your sales representative or customer support directly (information available on the Company's webpage) to obtain an RMA (Return Material Authorization) before shipping the products back to the Company's support center. Siargo commits to responding as fast as possible. Regular service will be performed within 5 business days if no major parts change is required.

9. Troubleshooting

Phenomena	Possible causes	Actions
No signal	The power is not connected.	Connect the power and then check the cable.
	Cable connection incorrect	Check cable
	No flow or clogging	Check flow and contamination.
	Power regulator failure	Return to factory
	Sensor failure	Return to factory
Large errors or unexpected flow rate	Particles, fluid type	Check system
Erroneous or large noise	Vibration, unstable flow	Check system
Valve not work	Wire connection, valve	Return to factory
Offset unstable	Circuitry instability	Check the system, power off
No digital interface	Wrong address, software	Check commands, connection

10.Warranty and Liability

(Effective January 2018)

Siargo warrants that the products sold hereunder, when used and installed properly under normal circumstances and services, will be free from defects. As described in this user manual, it shall be free from faulty materials or workmanship for 180 days for OEM products and 365 days for non-OEM products from the date of shipment. This warranty period is inclusive of any statutory warranty. Any repairs or replacement product shall bear the exact terms of this warranty.

Siargo makes no warranty, representation, or guarantee and shall not assume any liability regarding the suitability of the products described in this manual for any purposes that are not specified in this manual. Users shall be fully responsible for validating the performance and suitability of the products for their specific designs and applications. For any misuse of the products outside the scope described herein, the user shall indemnify and hold Siargo and its officers, employees, subsidiaries, affiliates, and sales channels harmless against all claims, costs, damages, expenses, and reasonable attorney's fees arising from direct or indirect sources.

Siargo makes no other warranty, express or implied, and assumes no liability for any special or incidental damage or charges, including but not limited to any damages or charges due to installation, dismantling, reinstallation, etc., or other consequential or indirect damages of any kind. To the extent permitted by law, the exclusive remedy of the user or purchaser, and the limit of Siargo's liability for any and all losses, injuries, or damages concerning the products, including claims based on contract, negligence, tort, strict liability, or otherwise shall be the return of products to Siargo, and upon verification of Siargo to prove to be defective, at its sole option, to refund, repair or replacement of the products. Regardless of form, no action may be brought against Siargo more than 365 days after the cause of action accrues. The products returned under warranty to Siargo shall be at the user or purchaser's risk of loss and will be returned, if at all, at Siargo's risk of loss. Purchasers or users are deemed to have accepted this limitation of warranty and liability, which contains the complete and exclusive limited warranty of Siargo. It shall not be amended, modified, or its terms waived except by Siargo's sole action.

The product information in this manual is believed to be accurate and reliable at the time of release or when made available to users. However, Siargo shall assume no responsibility for any inaccuracies and/or errors and reserves the right to make changes without further notice for the relevant information herein.

This warranty is subject to the following exclusions:

(1) Products that have been altered, modified, or have been subject to unusual physical or electrical circumstances, but not limited to those stated in this document or any other actions that cannot be deemed as proper use of the products;

(2) Products that have been subject to chemical attacks, including exposure to corrosive substances or contaminants. In the case of battery usage, long-term discharge, or leakage-induced damage;
(3) Products that have been opened or dismantled for whatever reason;
(4) Products that have been subject to working conditions beyond the technical specification as described by this manual or related datasheet published by the manufacturer;
(5) Any damages incurred by the incorrect usage of the products;
(6) Siargo does not provide any warranty on finished goods manufactured by others. Only the original manufacturer's warranty applies.
(7) Products resold by unauthorized dealers or any third parties.

11. Service/order contact and other information

Siargo Ltd. is making every effort to ensure the quality of its products. For any questions or product support, contact your direct sales representative. If you require additional assistance, contact the customer service at the address listed below. We will respond quickly to your requests and work with you to your complete satisfaction.

For sales or product orders, contact the local sales representatives or distributors listed on the company's webpage: www.Siargo.com.

For any returns, contact your direct sales representative to obtain an RMA. For any further assistance, contact info@siargo.com to obtain additional information or a Return Materials Authorization (RMA) before shipping the product back to the factory for factory services such as calibration. In your email messages, please specify the status of the product you intend to ship back to the factory, and include your shipping address. Be sure to write the RMA on the returned package or include a letter with the RMA information.

Direct customer service request(s) should be addressed to

Siargo Ltd.
4677 Old Ironsides Drive, Suite 310,
Santa Clara, California 95054-1857, USA
Tel: +1(408)969-0368
Email: Info@Siargo.com

For further information and updates, please visit www.Siargo.com.

Appendix I: Product evaluation kit

Siargo offers a product evaluation kit. It includes a digital data converter, USB data cable, and User Application software. The kit allows quick evaluation of the product's performance on a Microsoft Windows-based computer. This kit can also be used for simple applications with digital data transfer. The user can read and visualize the flow rate, obtain the totalizer or accumulated flow rate, perform basic control, tune control parameters, and save the data for further analysis. It can be connected to up to 128 products via the RS485 serial interface.

For further information and to purchase the evaluation kit, contact the manufacturer or the sales representative.

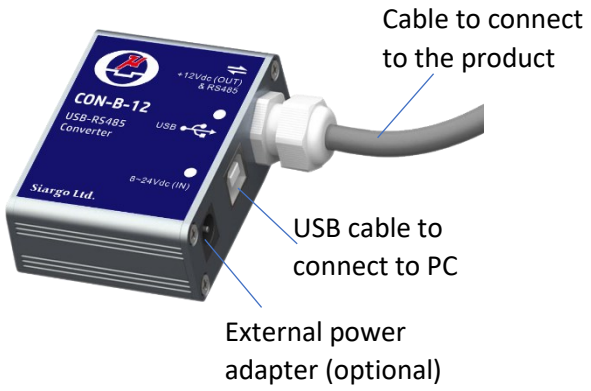

Each converter has a fixed cable that can be directly connected to the product. The USB cable to the PC is also included.

For most products, the power from the PC via the USB cable will be sufficient. No external power will be required. However, for multiple products connected in series, the power supplied by the USB cable may not be enough. An external power adapter with 8~24Vdc voltage will be required.

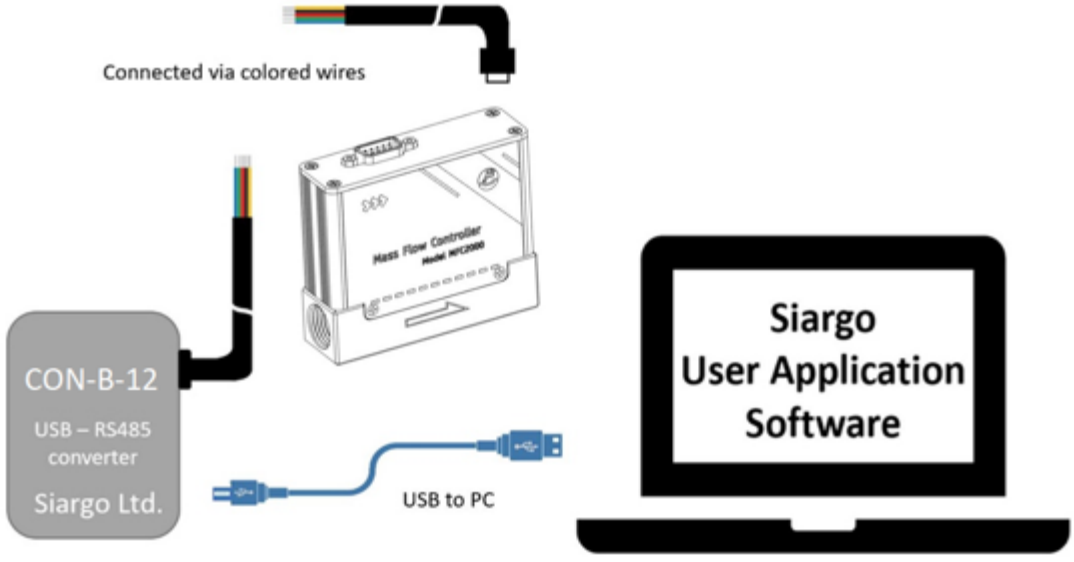

Appendix II: Remote operator interface

The remote operator interface is designed for quick, remote operation of Siargo's mass flow controllers. It provides users with the option to control the flow, purge, and shut off the controller. It can also be used to reset the offset or null flow remotely.

This tool is handy for some on-site process control without using a computer or a PLC data process. Users can set/dial the set point flow and instantly read back the controlled flow in the process line.

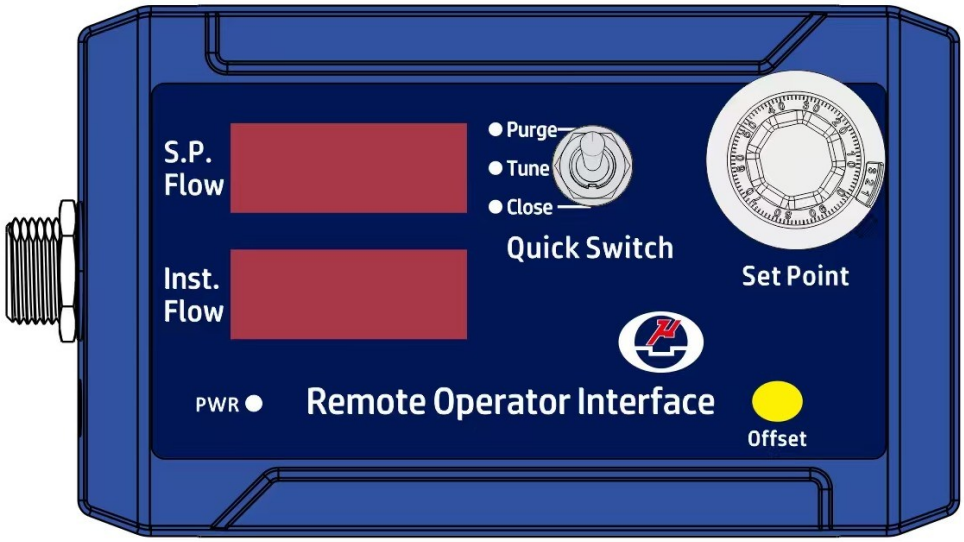

Model: MFC ROI 1000

Appendix III: Document history

Revision VA.3.03 (November 2025)

- The product selection model code description update.

Revision VA.3.02 (September 2025)

- Added mechanical dimension options and NPT connectors.

Revision VA.3.01 (August 2025)

- Update product selection by adding the evaluation kit, remote operator interface, and corrections.

Revision VA.3 (July 2025)

- Update product selection.

Revision VA.2.04 (October 2024)

- Change photos;
- RS485 Modbus communication protocol corrections.
- Add external leakage rate (He).

Revision VA.2.03 (July 2024)

- Minor corrections.

Revision VA.2.02 (June 2024)

- Add the pressure drop curves.
- Minor corrections.

Revision VA.2.01 (March 2024)

- Correct the cable color.
- Other minor correction.

Revision VA.2 (February 2024)

- Revised the accuracy and mechanical dimensions.

Revision VA.1.06 (July 31, 2025)

- Correct typos.

Revision VA.1.05 (January 2024)

- Add the model numbers of 1000, 2000, and 5000 mLn/min.

Revision VA.1.04 (December 2023)

- Minor corrections.

Revision VA.1.03 (August 2023)

- Minor corrections.

Revision VA.1.02 (August 2023)

- Update the Mechanical dimensions *(3.3 Mechanical dimensions).*

Revision VA.1.01 (July 2023)

- Add the BSPT connection (*6. Product selection*);
- Corrections (*7. Technical specifications)*

Revision VA.1 (July 2023)

- Add the mechanical dimensions of 200 Ln/min;
- Update contact address.

Revision VA.0 (February 2023)

- First release.