Siargo Ltd.



Mass Flow Controller VA.1.02

MFC5000 SERIES

© 2025 Siargo Ltd.

www.Siargo.com

Mass Flow Controller

With proprietary MEMS *Thermal-D* flow sensing technologies

MFC5000 Series

User Manual

Document No. 12-2025-MFC3 EN
Issue date 2025.12
Revision VA.1.02

Siargo Ltd.
4677 Old Ironsides Drive, Suite 310,
Santa Clara, California 95054-1857,
USA

Tel: +1(408)969-0368
Email: Info@Siargo.com

© Copyright 2025 by Siargo Ltd.
Siargo Ltd. and its subsidiaries reserve the right to change the specifications and/or descriptions without prior notice. For further information and updates, please visit: www.Siargo.com

Attention!

- Please carefully read this manual before operating this product.
- Do not open or modify any hardware that may lead to irrecoverable damage.
- Do not use this product if you suspect any malfunctions or defects.
- Do not use this product for corrosive media or in a strong vibrational environment.
- Use this product according to the specified parameters.
- Only the trained or qualified personnel shall be allowed to perform product services.

Use with caution!

- Be cautious of electrical safety, even if it operates at a low voltage, any electrical shock might lead to some unexpected damage.
- The gas to be measured should be clean and free of particles. Do not apply this meter to a liquid medium.
- Do not apply for any unknown or non-specified gases that may damage the product.
- For remote data, please be sure the meter is configured correctly.

Table of Contents

1. Overview 5
2. Receipt / Unpack of the Products 6
3. Knowing the Products 7
   3.1 Product Description 7
   3.2 Power and Data Cable Description 7
   3.3 Mechanical Dimensions 8
4. Installation 9
5. Operation 11
   5.1 Check the Product Specifications 11
   5.2 Check the Leakage 11
   5.3 Power the Product and Digital Data Connection 11
   5.4 LED and Rotary Switches Descriptions 12
      5.4.1 LED and Rotary Switches 12
      5.4.2 LED Status Indicator 12
      5.4.3 Summary of the Functions 13
   5.5 DeviceNet Communication 14
      5.5.1 Prepare for Installation 14
      5.5.2 DeviceNet connectors 14
      5.5.3 Maximal Cable Lengths 14
      5.5.4 Drop and Trunk Lines 15
      5.5.5 Protocol 15
   5.6 Service Port and Evaluation 23
   5.7 RS485 Modbus Communication Protocol 24
      5.7.1 Hardware Connection 24
      5.7.2 Communication Parameters 24
      5.7.3 Frame 25
      5.7.4 Function Codes 25
      5.7.5 Registers 25
   5.8 Analog Voltage (0 ~ 5 Vdc) Output 31

6 Product Selection 32
7 Technical specifications 34
8 Technical Notes for the Product Performance 35
8.1 Measurement Principle 35
8.2 Precautions for the Best Performance of the Product 35
8.2.1 Comparison with a Third-party Reference Meter 35
8.2.2 Particle Contamination and Fluidic Cleanness 36
8.2.3 Apply to a Different Gas Medium 36
8.2.4 Recalibration and Maintenance 37
9 Troubleshooting 38
10 Warranty and Liability 39
11 Service/Order Contact and Other Information 41
Appendix I: Product Evaluation and Diagnosis Kit 42
Appendix II: Document history 43

1. Overview

This manual provides essential information for the operation of the MFC5000 series of gas mass flow controllers for flow control applications with the full-scale mass flow rate from 50 sccm up to 20 SLPM. The series is made in compliance with SEMI standards for the relevant applications. The product's performance, maintenance, troubleshooting, product orders, technical support, and repair are also included. The product has standard communication options such as DeviceNet, ProfiNet, EtherCat, and IO-Link. These interfaces can also be further customized upon request.

The MFC5000 mass flow controller is designed for process control with a 100:1 dynamic range. It controls a pressure range of 0.1 to 1 MPa (15 to 150 PSI) and a compensated temperature from 0 to 50°C. The device can also work under vacuum conditions.

The products are designed with female ports that allow for the easy change of mechanical connectors. The standard connectors are VCR, and other customized ones are available upon request.

The products are operated with Siargo's proprietary MEMS ***Thermal-D***™ sensing technology and smart control electronics. This unique mass flow sensing technology, compared to conventional calorimetric flow sensing technology on the market, removes gas sensitivity for some gases with similar diffusivity and allows gas identification once programmed. It particularly addresses the problematic nonlinearity in gas conversion and the inaccuracy when applying surrogate gas calibration. The sensor surface is passivated with silicon nitride ceramic materials together with water/oilproof nano-coating for performance and reliability. For corrosive gases and reactive gases, a special conforming coating is applied. It is the first of its kind in the industry that could sense the mass flow in multiple gases without a manual gas conversion factor. As such, it allows high precision for gas process control with nitrogen calibration.

The series also offers options for building with semi-grade pure 316L stainless steel according to the required flow channel properties.

2. Receipt / Unpack of the Products

Upon receipt of the products, please check the packing box before dismantling the packing materials. Ensure no damage during shipping. If any abnormality is observed, please contact and notify the carrier who shipped the product, and inform the distributors or sales representatives if the order is not placed directly with the manufacturer; otherwise, the manufacturer should be informed as well. For any further actions, please refer to the return and repair section in this manual.

If the packing box is intact, open it to find the product inside. The power and data cable (part number: M12-2-5000), as shown below, may also be found if it is included in the manufacturing order.



Figure 2.1: MFC5000 DeviceNet model



Figure 2.2: power and data cable M12-2-5000

Please check immediately for the integrity of the product as well as the power and data cable. If any abnormality is identified, please notify the distributor/sales representative or manufacturer as soon as you can. If any defects are confirmed, an exchange shall be arranged immediately via the original sales channel. This user manual shall be included in the packing box or provided electronically upon request. In most cases, this manual shall be made available to the customer before the actual order.

The standard cable (part number: M12-2-5000) has an M12 connector with a length of 1.0 m. If another interface is ordered, the cable will be altered accordingly.

3. Knowing the Products

3.1 Product Description

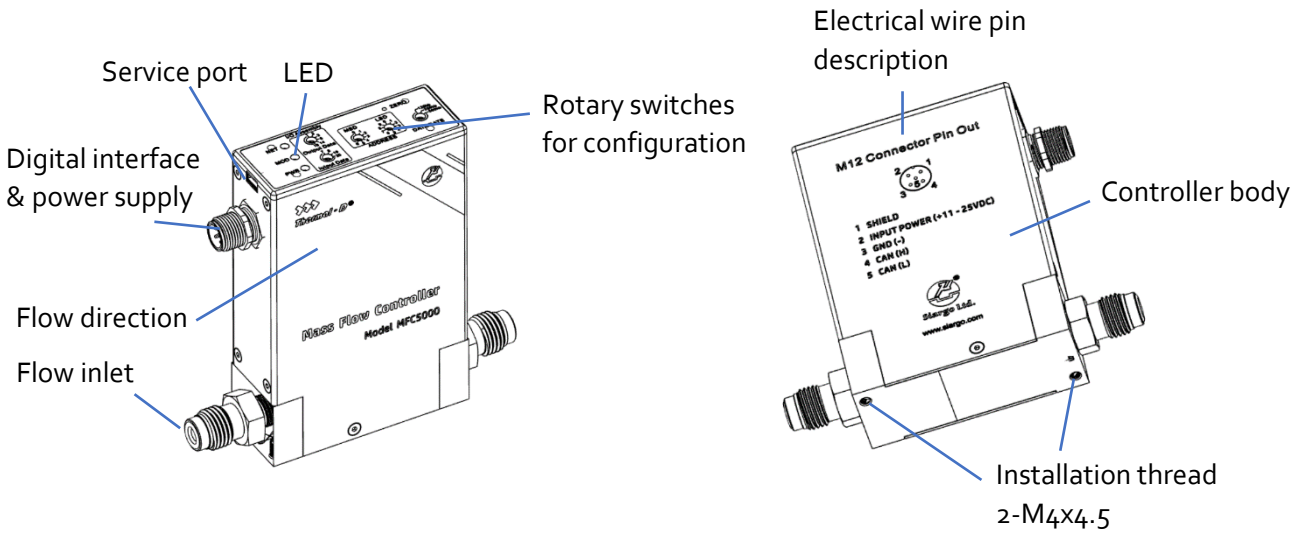

Figure 3.1: MFC5000 product with DeviceNet interface

3.2 Power and Data Cable Description

Table 3.1. The DeviceNet connector is a standard M12 connector with the following pin definitions

Pin	Color	Wire	Usage	Male (MFC5000)	Female (cable)
1	Bare	Drain	Shield	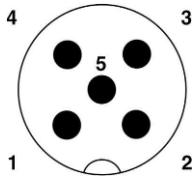	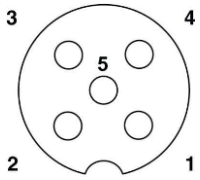
2	Red	V+ (24 Vdc)	Power		
3	Black	V- (0 Vdc)	Ground		
4	White	CAN_H (+)	Signal		
5	Blue	CAN_L (-)	Signal		

3.3 Mechanical Dimensions

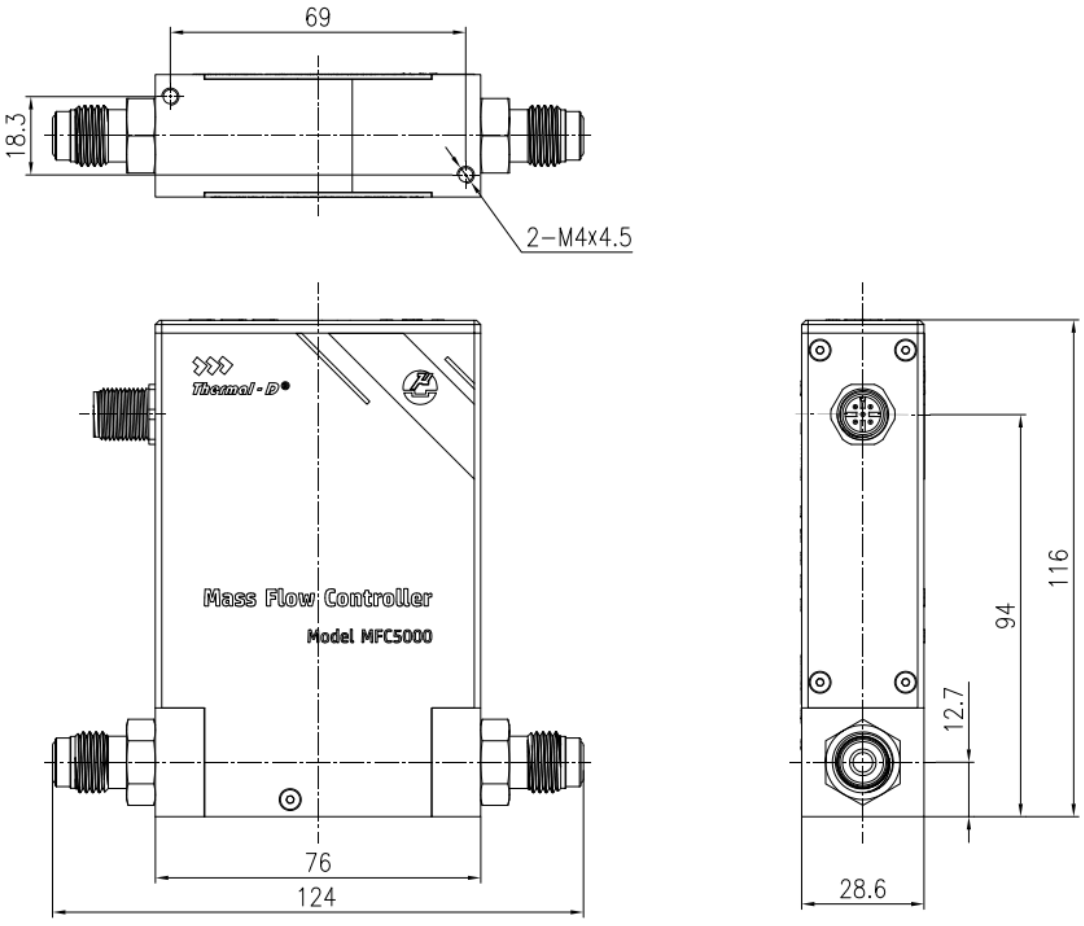

Figure 3.2: MFC5000 dimensions for models with full-scale up to 20 SLPM.

4. Installation

Do not open or alter any part of the product that would lead to malfunction and irreparable damage. It will also forfeit the terms of the warranty and cause liability. Check the application requirements and verify whether they match the product specifications, in particular, the gas compatibility and pressure/temperature ratings for safety reasons.

The product is thoroughly inspected for its quality and meets all safety requirements at the time of shipment. However, additional safety measures should be applied during the installation. This includes but is not limited to the leakage verification procedures, standard EDS (electrostatic discharge) precautions, and DC voltage precautions. Other tasks, such as calibration, part replacement, repair, and maintenance, must only be performed by trained personnel. Upon request, the manufacturer will provide necessary technical support and/or training for the personnel.

There are no preferred space directions for the installation. However, since the products are calibrated at the horizontal installation, vertical placement may incur some minor offset if the products are calibrated with a large dynamic range. When this happens, please apply the reset offset function described in this manual (Section 5) to ensure the offset is properly zeroed. The flow direction should be aligned with the arrow mark on the meter body. If the fluid has particles or debris, it is strongly recommended to install a filter upstream.

The products have two mounting holes (threaded) located at the bottom of the products, as shown in Section 3.3.

The connection pipes or tubes should be clean and free of foreign materials. Gas compatibility must be observed for the proper performance of the products. To ensure there is no gas instability, the pipe or tube diameter should match that of the product. Avoid installing pipes or tubes with a smaller diameter than that of the products; otherwise, it may create a strong flow instability, particularly at the laminar flow range, and result in significant inaccuracy of the measurements.

If another valve or pressure regulator must be installed closer to the products, please keep them at a distance of at least 15 times the pipe diameter from the products.

Please follow the following steps to complete the installation:

a) Upon opening the package, the product's physical integrity should be inspected to ensure no visual damage.

b) Do not install this product in an environment with excessive vibration, noise, and or

c) Before installation of the product, please ensure that the pipe debris or particles, or any other foreign materials, are completely removed.

d) Close the upstream valve, if any, completely.

e) During installation, please make sure no foreign materials (such as water, oil, dirt, particles, etc.) enter the installation pipeline.

f) Make sure the power source is in the off status before connecting electrical wires per the wire definition in Table 3.1. Please be sure of the power supply range (i.e., 12~24Vdc, 1A) and power supply polarization. If an adapter is used, ensure it meets industrial standards and has all necessary safety certifications.

g) For the data communication wire connection, please follow the description in Table 3.1 and ensure that the wires are correctly connected to the proper ports on your data device/equipment. Please ensure the data cable meets industrial standards with the appropriate shielding.

h) Before starting the flow control process, make sure no leakage is present after the installation.

i) This will conclude the installation.

Cautions

a) Don't alter any parts of the product.

b) Ensure the electrical connection is done correctly according to the instructions.

c) Ensure there are no mechanical stresses in the connections.

d) The strong electromagnetic interference sources or mechanical shocks in the pipeline may also lead to malfunctioning of the product.

Inline Particle filter

If there is any suspicion of particulates or related contamination, it is recommended to install an inline particle filter to prevent product malfunctions from particle contamination in the fluidic stream.

A typical inline particle filter supplied by Swagelok can work well for this purpose. For a detailed installation procedure with such a filter, please consult the manufacturer's product instructions.



Figure 4.1: A typical particle filter by Swagelok.

5. Operation

5.1 Check the Product Specifications

Before starting to use this product, check the product specifications that can be found in this manual or the basic information from the datasheet on the company's website www.Siargo.com.

The detailed product technical specifications can be found in Section 7. For a specific application, the pressure rating must not be higher than the system pressure to be measured, and the flow range should also be within the specified range. The gas medium for the controller must also be consistent with that specified by the product. Be particularly cautious about the supplied voltage indicated in the specification. A higher voltage may lead to irrecoverable damage, and a lower voltage will not power the product for any desired functions.

For optimal product performance, it is recommended that the gas applied be clean and free of particles or other foreign materials.

5.2 Check the Leakage

Check gas leakage in the pipe system before the operation. If necessary, pressurized nitrogen or air can be used for the leakage check.

5.3 Power the Product and Digital Data Connection

Although this product complies with the CE-required EMC regulations, it also requires the product to be used according to the standard electrical device practice. Before connecting the product with external DC power, make sure the supply voltage is within the range specified in Section 7. Be cautious that standard electrical device precautions, such as EDS (electrostatic discharge) and DC voltage, are observed. Excessive electrostatic discharge may damage the product.

The manufacturer-supplied power and data cable has a locking fixture. Lock the cable and ensure it is properly engaged to prevent accidental unplugging.

5.4 LED and Rotary Switches Descriptions

5.4.1 LED and Rotary Switches

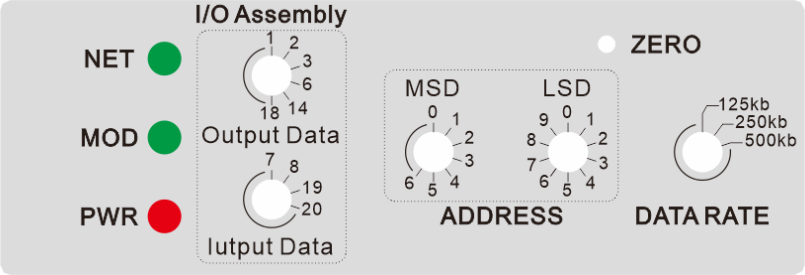

Figure 5.1: LED and rotary switches

The MFC5000 mass flow controller features five rotary switches, allowing users to configure the I/O assembly, MACID (Address), and baud rate (data rate). The three LED lights (PWR, MOD, and NET) indicate the device's working status.

5.4.2 LED Status Indicator

There are three types of LEDs: one for power status (Power status LED: PWR), one for device status (Module status LED: MOD), and the other for displaying network status (Network status LED: NET).

The power status is shown in red, and the other 2 LEDs are 2-color LEDs illuminated in green and red. The LED color will show the device status. The illumination (ON, blinking, or OFF) also indicates the functionality.

Power Status LED (PWR)

This LED indicates the status of the device's power.

LED Status	Explanation
OFF	Power is off (no power)
Red	Power on

Device Status LED (MOD)

This LED indicates the status of the device.

LED Status	Explanation
OFF	Power is off (no power)
Green	The device is working (Device in operation)
Green blinking (Interval of 0.5 seconds)	Initializing or standby (Device in Standby)
Red blinking	Recoverable error detected (Minor Error)

(Interval of 0.5 seconds)	
● Red	The non-recoverable error was detected (Unrecoverable Error)
●/● Blinking alternatively in green and red (Interval of 0.5 seconds)	Self-diagnosis in progress (Device Self Testing)

Network Status LED (NET)

This LED indicates the network status.

LED Status	Explanation
● OFF	Power is off (no power); or not connected to the network. (no power/not online or offline)
● Green	Connected to the network, and a link is established (Linked or Connected)
● Green blinking (Interval of 0.5 seconds)	Connected, but the link is not established (Online but Not Connected)
● Red blinking (Interval of 0.5 seconds)	I/O Connection timeout (Connection Time-Out)
● Red	Communication is not available The MACID overlaps, or the CAN bus is Bus-off. (Critical Link Failure)

5.4.3 Summary of the Functions

1) Set the MACID
   The *ADDRESS rotary switches* allow the user to set the DeviceNet MACID, range 0 ~ 63, default: 63.

2) Set the communication baud rate
   The *DATA RATE rotary switch* allows the user to set the DeviceNet communication baud rate, 125 kbps, 250 kbps, or 500 kbps, default: 500 kbps.

3) Set the I/O Assembly Input Instance and Output Instance
   The *I/O Assembly rotary switches* allow the user to select the Input Instance (default: 2) and Output Instance (default: 7).

5.5 DeviceNet Communication

The DeviceNet interface allows the mass flow controller to connect directly to DeviceNet Networks, according to the Mass Flow Controller Profile specified by the open DeviceNet vendor association (ODVA: www.odva.org). This guide describes the interface and installation of a mass flow controller in the DeviceNet system. The communication is only between a slave and a master. Each slave has its unique MACID (Node Address) on the network, which can be set via software or hardware on the mass flow controller.

5.5.1 Prepare for Installation

Before installing the product, ensure a DeviceNet master has been installed on the DeviceNet system where the mass flow controller will be installed. Then, load the EDS file with the configuration tool Bitmaps. The EDS file will come with the product. If you need to change the default address and baud rate, you can do so via the software or the configuration buttons on the top of the mass flow controller.

5.5.2 DeviceNet connectors

Please refer to 3.2 for the connector description.

The power supply to the DeviceNet system must not be a shared one. All protections should be applied. Please ensure the data/power connector is the correct type (M12).

5.5.3 Maximal Cable Lengths

The DeviceNet cable system uses a trunk/drop line topology.

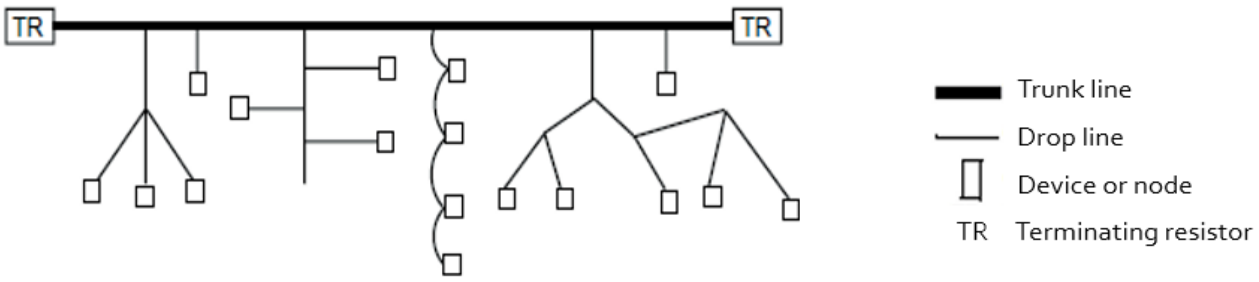

The distance between any two points must not exceed the maximum distance for the corresponding data rate.

Table 5.2 Data Rate and Cable Specification

Data rate (kbps)	Flat cable (m)	Thick cable (m)	Mid cable (m)	Thin cable (m)
125	420	500	300	100
250	200	250	250	100
500	75	100	100	100

5.5.4 Drop and Trunk Lines

Regardless of the cable type, the cumulative drop line length is the sum of all drop lines. This sum cannot exceed the maximum cumulative length allowed for the data rate used, i.e., for a 125k bits/s data rate, the sum is 156m, for a 250k bit/s data rate, the length is 78m, and for a 500k bit/s data rate, the length is 39m.

The trunk line must be terminated with 121 Ohm, 1%, 1/4W resistors at both ends.

5.5.5 Protocol

The MFC5000 mass flow controller is a slave on the DeviceNet bus system. The communication must be initiated and executed by a master on the same system.

5.5.5.1 Initial Setting

The Initial/default Settings of the MFC5000 mass flow controller are listed in the following table.

Parameters	Setting Details
MACID	0 ~ 63. The initial setting is 63.
Baud rate	125, 250, or 500 kbps. The initial setting is 500 kbps.
I/O Assembly Input Instance	2
I/O Assembly Output Instance	7
Full Scale (Sensor output, Setpoint, Valve Output)	0x6000 (= 24576)
Data Type (Sensor output, Setpoint, Valve Output)	INT (Integers)
Data Units (Sensor output, Setpoint, Valve Output)	Counts

5.5.5.2 Communication Specifications

The MFC5000 mass flow controller is a Group 2 Only Server device whose messages comply with the CAN 2.0A standard and the DeviceNet protocol. MFC5000 supports one type of connection, i.e., Explicit. As defined by the DeviceNet protocol.

CAN Identifier	Details	
10xxxxxx101 (Group2)	Master's Command	The master sends a command to a slave.
01111xxxxxx (Group1)	Slave's Response	A slave responds to a command from the master.

The messages that CAN Identifier starts with "01" are distinguished as Group 1, and start with "10" as Group 2. After a message, instructions, or data are provided, "xxxxxx" is the slave MACID in binary format.

e.g. 1: **10xxxxxx101 Data 1 Data 2 Data 3 …**
The master sends an Explicit request message to a slave.

e.g. 2: **10xxxxxx011 Data 1 Data 2 Data 3 …**
The slave sends an Explicit response message to the master.

*. Each piece of data consists of 1 byte (8 bits), and the number of data points depends on the message.

Note that the maximum number of data sent at the same time is 8 bytes. Separate into several units when sending data of 8 bytes or more.

5.5.5.3 Operational Flowchart

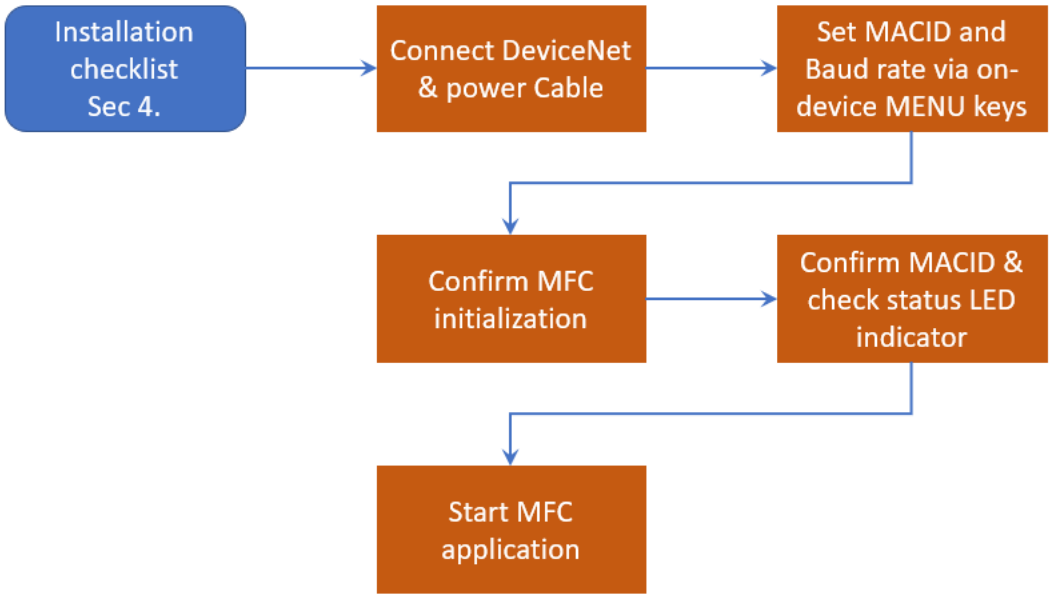

5.5.5.4 Assembly Object Instance Attributes List

Each instance is assigned the input and output data. Select an instance for input and output to complete the data format of the I/O Poll communication.

Instance No.	I/O Type	Data Type	Setting Details
1	INPUT	INT	Flow *** INPUT means a response from a slave to a master.** *** INT means** integer format.
2	INPUT	INT	Status and Flow *** Instance 2 is the default input data.**
3	INPUT	INT	Status, Flow, and Valve
6	INPUT	INT	Status, Flow, Setpoint, Override, and Valve
7	OUTPUT	INT	Setpoint *** OUTPUT means requests from a master to a slave.** *** Instance 7 is the default output data.**
8	OUTPUT	INT	Override and Valve
14	INPUT	REAL	Status and Flow ***REAL means floating point (IEEE754)**
18	INPUT	REAL	Status, Flow, Setpoint, Override, and Valve
19	OUTPUT	REAL	Setpoint
20	OUTPUT	REAL	Override and Valve

5.5.5.5 Assembly Object Instance Attributes Details

5.5.5.5.1 Instance 1

<table>
<tr><th>Attribute ID</th><th>Access Rule</th><th>NV</th><th>Name</th><th>Data Type</th><th>Details</th></tr>
<tr><td>3 (0x03)</td><td>Get</td><td>-</td><td>Flow</td><td>INT</td><td>Reads the flow rate output (Flow).
* 0 ~ 0x6000 corresponds to 0% ~ 100% of the full-scale flow rate.
* Integer format
<table>
<tr><th>Reading Order (Byte)</th><th>Contents Read</th></tr>
<tr><td>0</td><td>Flow rate output (Low Byte)</td></tr>
<tr><td>1</td><td>Flow rate output (High Byte)</td></tr>
</table>
</td></tr>
</table>

5.5.5.5.2 Instance 2

Attribute ID	Access Rule	NV	Name	Data Type	Details
3 (0x03)	Get	-	Status Flow	INT	Reads the device state (Status) and flow rate output (Flow). *** 0 ~ 0x6000 corresponds to 0% ~ 100% of the full-scale flow rate.** * Integer format

Reading Order (Byte)	Contents Read
0	Device status
1	Flow rate output (Low Byte)
2	Flow rate output (High Byte)

5.5.5.5.3 Instance 3

Attribute ID	Access Rule	NV	Name	Data Type	Details
3 (0x03)	Get	-	Status Flow Valve	INT	Reads the device state (Status), flow rate output (Flow), and valve voltage (Valve). *** 0 ~ 0x6000 corresponds to 0% ~ 100% of the full-scale flow rate, and 0% ~ 100% of the valve voltage.** * Integer format

Reading Order (Byte)	Contents Read
0	Device status
1	Flow rate output (Low Byte)
2	Flow rate output (High Byte)
3	Valve voltage (Low Byte)
4	Valve voltage (High Byte)

5.5.5.5.4 Instance 6

<table>
<tr><th>Attribute ID</th><th>Access Rule</th><th>NV</th><th>Name</th><th>Data Type</th><th>Details</th></tr>
<tr><td>3 (0x03)</td><td>Get</td><td>-</td><td>Status
Flow
Setpoint
Override
Valve</td><td>INT</td><td>Reads the device state (Status), flow rate output (Flow), set flow rate (Setpoint), valve state (Override), and valve voltage (Valve).
* 0 ~ 0x6000 corresponds to 0% ~ 100% of the full-scale flow rate, 0% ~ 100% of the setpoint, and 0% ~ 100% of the valve voltage.
* Integer format
<table>
<tr><th>Reading Order (Byte)</th><th>Contents Read</th></tr>
<tr><td>0</td><td>Device status</td></tr>
<tr><td>1</td><td>Flow rate output (Low Byte)</td></tr>
<tr><td>2</td><td>Flow rate output (High Byte)</td></tr>
<tr><td>3</td><td>Set flow rate (Low Byte)</td></tr>
<tr><td>4</td><td>Set flow rate (High Byte)</td></tr>
<tr><td>5</td><td>Valve state</td></tr>
<tr><td>6</td><td>Valve voltage (Low Byte)</td></tr>
<tr><td>7</td><td>Valve voltage (High Byte)</td></tr>
</table>
</td></tr>
</table>

5.5.5.5.5 Instance 14

<table>
<tr><th>Attribute ID</th><th>Access Rule</th><th>NV</th><th>Name</th><th>Data Type</th><th>Details</th></tr>
<tr><td>3 (0x03)</td><td>Get</td><td>-</td><td>Status
Flow</td><td>REAL</td><td>Reads the device state (Status) and flow rate output (Flow).
* Floating point format (IEEE754)
<table>
<tr><th>Reading Order (Byte)</th><th>Contents Read</th></tr>
<tr><td>0</td><td>Device status</td></tr>
<tr><td>1</td><td>Flow rate output (Low Byte)</td></tr>
<tr><td>2</td><td>Flow rate output</td></tr>
<tr><td>3</td><td>Flow rate output</td></tr>
<tr><td>4</td><td>Flow rate output (High Byte)</td></tr>
</table>
</td></tr>
</table>

5.5.5.5.6 Instance 18

<table>
<tr><th>Attribute ID</th><th>Access Rule</th><th>NV</th><th>Name</th><th>Data Type</th><th>Details</th></tr>
<tr><td>3 (0x03)</td><td>Get</td><td>-</td><td>Status
Flow
Setpoint
Override
Valve</td><td>REAL</td><td>Reads the device state (Status), flow rate output (Flow), set flow rate (Setpoint), valve state (Override), and valve voltage (Valve).
* Floating point format (IEEE754)
<table>
<tr><th>Reading Order (Byte)</th><th>Contents Read</th></tr>
<tr><td>0</td><td>Device status</td></tr>
<tr><td>1</td><td>Flow rate output (Low Byte)</td></tr>
<tr><td>2</td><td>Flow rate output</td></tr>
<tr><td>3</td><td>Flow rate output</td></tr>
<tr><td>4</td><td>Flow rate output (High Byte)</td></tr>
<tr><td>5</td><td>Set flow rate (Low Byte)</td></tr>
<tr><td>6</td><td>Set the flow rate</td></tr>
<tr><td>7</td><td>Set the flow rate</td></tr>
<tr><td>8</td><td>Set flow rate (High Byte)</td></tr>
<tr><td>9</td><td>Valve state</td></tr>
<tr><td>10</td><td>Valve voltage (Low Byte)</td></tr>
<tr><td>11</td><td>Valve voltage</td></tr>
<tr><td>12</td><td>Valve voltage</td></tr>
<tr><td>13</td><td>Valve voltage (High Byte)</td></tr>
</table></td></tr>
</table>

5.5.5.5.7 Instance 7

<table>
<tr><th>Attribute ID</th><th>Access Rule</th><th>NV</th><th>Name</th><th>Data Type</th><th>Details</th></tr>
<tr><td>3 (0x03)</td><td>Set</td><td>-</td><td>Setpoint</td><td>INT</td><td>Writes the set flow rate (Setpoint).
* 0 ~ 0x6000 corresponds to 0% ~ 100% of the setpoint.
* Integer format
<table>
<tr><th>Writing Order (Byte)</th><th>Contents Written</th></tr>
<tr><td>0</td><td>Set flow rate (Low Byte)</td></tr>
<tr><td>1</td><td>Set flow rate (High Byte)</td></tr>
</table></td></tr>
</table>

5.5.5.5.8 Instance 8

<table>
<tr><th>Attribute ID</th><th>Access Rule</th><th>NV</th><th>Name</th><th>Data Type</th><th>Details</th></tr>
<tr><td>3 (0x03)</td><td>Set</td><td>-</td><td>Override Setpoint</td><td>INT</td><td>Write the valve state (Override) and set the flow rate (Setpoint).
* 0 ~ 0x6000 corresponds to 0% ~ 100% of the setpoint.
* Integer format
<table>
<tr><th>Writing Order (Byte)</th><th>Contents Written</th></tr>
<tr><td>0</td><td>Valve state</td></tr>
<tr><td>1</td><td>Set flow rate (Low Byte)</td></tr>
<tr><td>2</td><td>Set flow rate (High Byte)</td></tr>
</table></td></tr>
</table>

5.5.5.5.9 Instance 19

<table>
<tr><th>Attribute ID</th><th>Access Rule</th><th>NV</th><th>Name</th><th>Data Type</th><th>Details</th></tr>
<tr><td>3 (0x03)</td><td>Set</td><td>-</td><td>Setpoint</td><td>REAL</td><td>Writes the set flow rate (Setpoint).
* Floating point format (IEEE754)
<table>
<tr><th>Writing Order (Byte)</th><th>Contents Written</th></tr>
<tr><td>0</td><td>Set flow rate (Low Byte)</td></tr>
<tr><td>1</td><td>Set the flow rate</td></tr>
<tr><td>2</td><td>Set the flow rate</td></tr>
<tr><td>3</td><td>Set flow rate (High Byte)</td></tr>
</table></td></tr>
</table>

5.5.5.5.10 Instance 20

<table>
<tr><th>Attribute ID</th><th>Access Rule</th><th>NV</th><th>Name</th><th>Data Type</th><th>Details</th></tr>
<tr><td>3 (0x03)</td><td>Set</td><td>-</td><td>Override Setpoint</td><td>REAL</td><td>Write the valve state (Override) and set the flow rate (Setpoint).
* Floating point format (IEEE754)
<table>
<tr><th>Writing Order (Byte)</th><th>Contents Written</th></tr>
<tr><td>0</td><td>Valve state</td></tr>
<tr><td>1</td><td>Set flow rate (Low Byte)</td></tr>
<tr><td>2</td><td>Set the flow rate</td></tr>
<tr><td>3</td><td>Set the flow rate</td></tr>
<tr><td>4</td><td>Set flow rate (High Byte)</td></tr>
</table></td></tr>
</table>

5.5.5.6 Configuration EDS file

3	Device Type	26	
4	Standard Revision Level		
5	Device Manufacturer Identifier	819	Module manufacturer ID
6	Manufacturer Model Number	MFC5000	
7	Software or Firmware Revision Level	V0130	
8	Hardware Revision Level	V0100	
9	Serial Number (optional)		
10	Device Configuration (optional)		
11	Device Status		
*	Reporting Mode		
*	Exception Status Report Interval (optional)		
12	Exception Status		
13	Exception Detail Alarm (optional)		
14	Exception Detail Warning (optional)		

5.6 Service Port and Evaluation

For quick online access or diagnosis, use the service port (see Figure 3.1). The service port can also be used for product evaluation.

The service port is configured for communication via RS485 Modbus RTU.

Table 5.6.1. The connector is a JST S4B-ZR(LF)(SN) connector with the following pin definitions

Pin	Definition	Male
1	Supply, V+	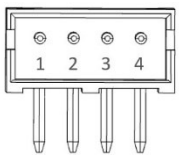
2	RS485 (A)	
3	RS485 (B)	
4	Ground	

For the product evaluation, the manufacturer offers an evaluation kit. The kit includes a hardware converter and free software that enables users to evaluate the product using a Microsoft-compatible computer. To acquire the kit, please contact the manufacturer or its representatives. Additional information about the Evaluation Kit can be found in Appendix I.

5.7 RS485 Modbus Communication Protocol

The digital communication protocol is based on the standard Modbus RTU Half-plex mode. A master (PC or PLC) can communicate with multiple slaves (the current product) for data exchange and configuration of communication parameters. Refer to Table 3.1 for the cable connection.

5.7.1 Hardware Connection

The RS485 hardware layer is TIA/EIA-485-A, as illustrated below. In this configuration, the product (MFC5000) is a slave.

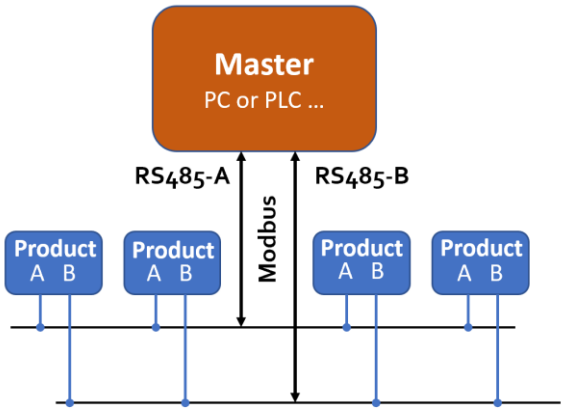

Figure 5.2: RS485 hardware

5.7.2 Communication Parameters

The PC UART communication parameters are listed in Table 5.3.

Table 5.3: PC UART Communication Parameters

Parameters	Protocol
	RTU
Baud rate (Bits per second)	38400 bps
Start bits	1
Data bits	8
Stop bits	1
Even/Odd parity	None
Bits period	104.2 µsec
Bytes period	1.1458 msec
Maximum data length	20
Maximum nodes	247

5.7.3 Frame

The frame function is based on the standard Modbus RTU framing:

Table 5.4: Frame Function

Start_bits	Address	Function codes	Data	CRC	Stop_bits
T1-T2-T3-T4	8 bit	8 bit	N 8 bit (20≥n≥0)	16 bit	T1-T2-T3-T4

Start_bits: 4 periods of a bit time for a new frame.

Address: The address can be set from 1 to 247 except for 157 (0x9d). 0 is the broadcast address.

Function codes: Define the product's functions/actions (slaves), either execution or response.

Data: The address of the register, the length of data, and the data themselves.

CRC: CRC verification code. The low byte is followed by the high byte. For example, a 16-bit CRC is divided into BYTE_H and BYTE_L. The BYTE_L will come first in the framing, followed by the BYTE_H. The last one is the STOP signal.

Stop_bits: 4 periods of a bit time for ending the current frame.

5.7.4 Function Codes

The Modbus function codes applied for the product are a subclass of the standard Modbus function codes. These codes are used to set or read the registers of the product:

Table 5.5: Function Codes

Code	Name	Functions
0x03	Read register	Read register(s)
0x06	Set a single register	Write one single 16-bit register
0x10	Set multiple registers	Write multiple registers

5.7.5 Registers

The product (MFC5000) has multiple registers available for the assignment of the various functions. With these functions, the user can obtain data from products, such as product addresses and flow rates from the registers, or set product functions by writing the corresponding parameters.

The currently available registers are listed in the following table, and the registers may be customized upon contacting the manufacturer. Where R: read; W: write-only; W/R: read and write.

Note: At the time of shipping, the write protection function is enabled except for the address and baud rate. Once the user completes the register value change, the write protection will be automatically enabled again to prevent incidental data loss.

Table 5.6: Registers

Functions	Description	Register	Modbus
Address	Product address (R/W)	0x0081	40130 (0x0081)
Serial number	Serial number of the product (R)	0x0030 ~ 0x0035	40049 (0x0030)
Flow rate	Current flow rate (R)	0x003A ~ 0x003B	40059 (0x003A)
Baud rate	Communication baud rate (R/W)	0x0082	40131 (0x0082)
GCF *	Gas conversion factor (R/W)	0x008B	40140 (0x008B)
Digital filter depth *	Response time or sampling time (R/W)	0x008C	40141 (0x008C)
Setpoint source	Set the setpoint source (R/W)	0x00BA	40187 (0x00BA)
Setpoint	Set the flow rate in percentage of the full-scale flow (R/W)	0x00BB	40188 (0x00BB)
Setpoint flow	Read the current flow rate set by the user. (R)	0x00BC ~ 0x00BD	40189 (0x00BC)
P Gain	PLD proportional control of the valve/flow rate. (R/W)	0x00BE	40191 (0x00BE)
G Gain	PLD differential control of the valve/flow rate. (R/W)	0x00BF	40192 (0x00BF)
Valve preload offset	The default or preloaded valve opening. (R/W)	0x00C0	40193 (0x00C0)
Exhaust mode	Set the exhaust mode (R/W)	0x00C1	40194 (0x00C1)
Exhaust value	This option is for open-loop control. (R/W)	0x00C2	40195 (0x00C2)
Valve status	The value provides the percentage of the opened valve (R)	0x00C3	40196 (0x00C3)
Offset calibration	Offset reset or calibration (W)	0x00F0	40241 (0x00F0)
Write protection	Write protection of selected parameters (W)	0x00FF	40256 (0x00FF)

Notes: 1, R – Read-only, W – Write only, R/W – Read and write.

2, For the * marked functions, please disable the write protection before executing the command.

The detailed information of each register is described below: Y: enabled; N: disabled.

Address	**0x0081**	**Write**	Y
		Read	Y
Description	Address of the product		
Value type	UINT 16		
Notes	Values range from 1 to 247, excluding 157 (0x9d). The broadcast address is disabled, and the default address is 1.		

SN, Serial number	**0x0030 ~ 0x0035**	**Write**	N
		Read	Y
Description	Series Number of the product, SN		
Value type	ASCII		
Notes	SN= value(0x0030), value(0x0031),….,value (0x0035); Receiving 12 bits as 2A 41 31 42 32 33 34 35 36 2A, the corresponding Serial Number is **A1B23456**.		

Flow rate	0x003A ~ 0x003B	Write	N
		Read	Y
Description	Current flow rate		
Value type	UINT 32		
Notes	➢ **Full scale five sccm (< 10 sccm):** Flow rate = [Value (0x003A) * 65536 + value (0x003B)] / 1,000,000 sccm ➢ **Full scale 10 ~ 5000 sccm:** Flow rate = [Value (0x003A) * 65536 + value (0x003B)] / 1,000 sccm ➢ **Full scale 1 ~ 5 SLPM (< 10 SLPM):** Flow rate = [Value (0x003A) * 65536 + value (0x003B)] / 1,000,000 SLPM ➢ **Full scale 10 ~ 20 SLPM:** Flow rate = [Value (0x003A) * 65536 + value (0x003B)] / 1,000 SLPM e.g., For an MFC5000 with the full scale of 100 sccm, when the user reads "0x0001 (=1)" from register 0x003A and "0x81CD (=33229)" from register 0x003B, the current flow rate = (1 * 65536 + 33229) / 1000 = 98.765 sccm.		

Baud rate	0x0082	Write	Y
		Read	Y
Description	Communication baud rate		
Value type	UINT 16		
Notes	0: baud rate=4800; 1: baud rate=9600; 2: baud rate=19200; 3 baud rate=38400. The default value is 3. For example, when the user reads "3" from register 0x0082, the baud rate is 38400.		

GCF	0x008B	Write	Y
		Read	Y
Description	The gas conversion factor for the application gas is different from the calibration gas.		
Value type	UINT 16		
Notes	The GCF of air is 1000 (default); it can be read from register 0x008B. **Note: The product will disable this function with write protection once the metering gas is confirmed with the proper GCF. For the GCF values, please contact the manufacturer.**		

Digital filter depth	0x008C	Write	Y
		Read	Y
Description	Digital filter depth setting		
Value type	UINT 16		
Notes	0 ~ 9 programmable, corresponding to 2^0 ~ 2^9 data sampling in the software filter. The default value is 3, corresponding to 2^3 = 8 data sampling.		

Setpoint source	0x00BA	Write	Y
		Read	Y
Description	Set the setpoint source.		
Value type	UINT 16		
Notes	Available valve modes: 0 and 1. **0** – analog control; **1** – Digital control.		

Setpoint	0x00BB	Write	Y
		Read	Y
Description	Set the flow rate as a percentage of the full-scale flow, where 0 represents zero flow or 0%, and 64000 corresponds to the full scale of 100%. The default value is 0, or zero flow.		
Value type	UINT 16		
Notes	Available valve parameters: 0 ~ 65535, 0 ~ 64000 corresponding to 0% ~ 100%. **0** - 0%; **64000** - 100%.		

Setpoint flow	0x00BC ~ 0x00BD	Write	N
		Read	Y
Description	Read the current flow rate that the user sets. The default value is 0.000 sccm or SLPM with a resolution of 0.001 sccm or SLPM.		
Value type	UINT 32		
Notes	Available valve parameters: 0 ~ 110000, i.e., 0 ~ 110.000 sccm or SLPM.		

P Gain	0x00BE	Write	Y
		Read	Y
Description	PLD proportional control of the valve/flow rate		
Value type	UINT 16		
Notes	Available valve parameters: 0 ~ 9999. The default value is 15.		

G Gain	0x00BF	Write	Y
		Read	Y
Description	PLD differential control of the valve/flow rate		
Value type	UINT 16		
Notes	Available valve parameters: 0 ~ 9999. The default value is 25.		

Valve preload offset	0x00C0	Write	Y
		Read	Y
Description	The default or preloaded valve opening.		
Value type	UINT 16		
Notes	Available valve parameters: 0 ~ 9999. The default value is 2000.		

Exhaust mode	0x00C1	Write	Y
		Read	Y
Description	Set the exhaust mode.		
Value type	UINT 16		
Notes	Available valve control modes: 0 and 1. 0 - Valve in PD control 1 - Valve in open-loop control		

Exhaust value	0x00C2	Write	Y
		Read	Y
Description	This option is for open-loop control.		
Value type	UINT 16		
Notes	Available valve parameters: 0 ~ 10000. The default value is 10000, i.e., fully open.		

Valve status	0x00C3	Write	N
		Read	Y
Description	This option is for open-loop control The value provides the percentage of the opened valve		
Value type	UINT 16		
Notes	Available valve parameters: 0 ~ 65535. 0 ~ 65535 corresponding to 0% ~ 100%. 0 - fully closed or 0%; 65535 - fully open or 100%.		

Offset calibration	0x00F0	Write	Y
		Read	N
Description	Reset or calibrate the offset.		
Value type	UINT 16, Fixed value 0xAA55		
Notes	To reset or calibrate the offset, write 0xAA55 to register 0x00F0. **Note: When executing this function, ensure there is NO flow in the flow channel.**		

Write protection	**0x00FF**	**Write**	Y
		Read	N
Description	Write protection disabler for a set value to a specific register.		
Value type	UINT 16, Fixed value 0xAA55		
Notes	This function is enabled at the time of product shipment. To enable the write function of a specific parameter, such as GCF or offset, the user needs to send 0xAA55 to register 0x00FF, and then the write function will be enabled (write protection is disabled). After the write execution is completed, the firmware will automatically re-enable the write protection.		

5.8 Analog Voltage (0 ~ 5 Vdc) Output

For products with DB9 connectors, the analog and digital (RS485 Modbus) can be offered simultaneously.

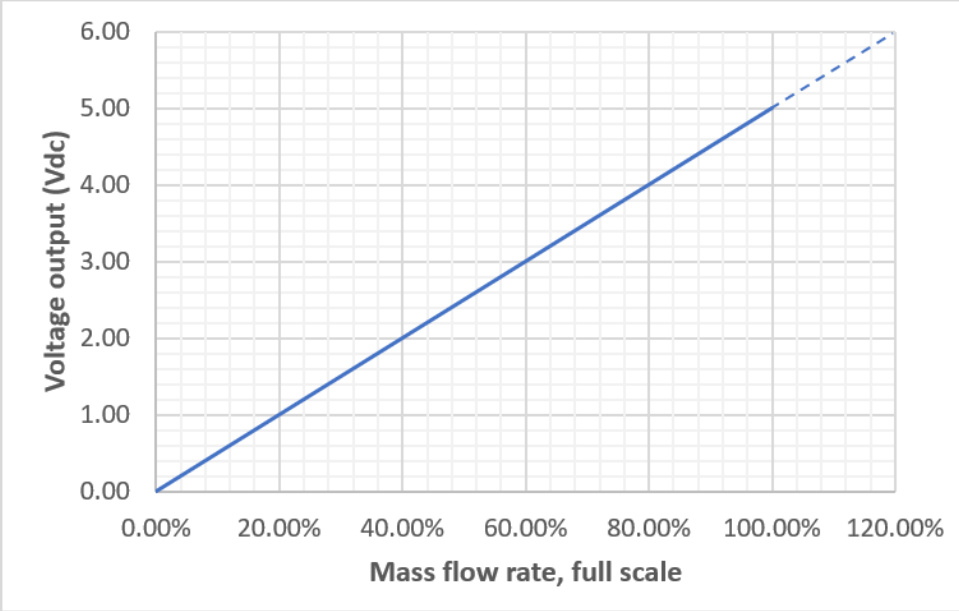

Figure 5.3: Analog output.

6 Product Selection

The product part number is composed of the product model number and suffixes indicating the full-scale flow rate, as well as the other parameters. Refer to the following for details.

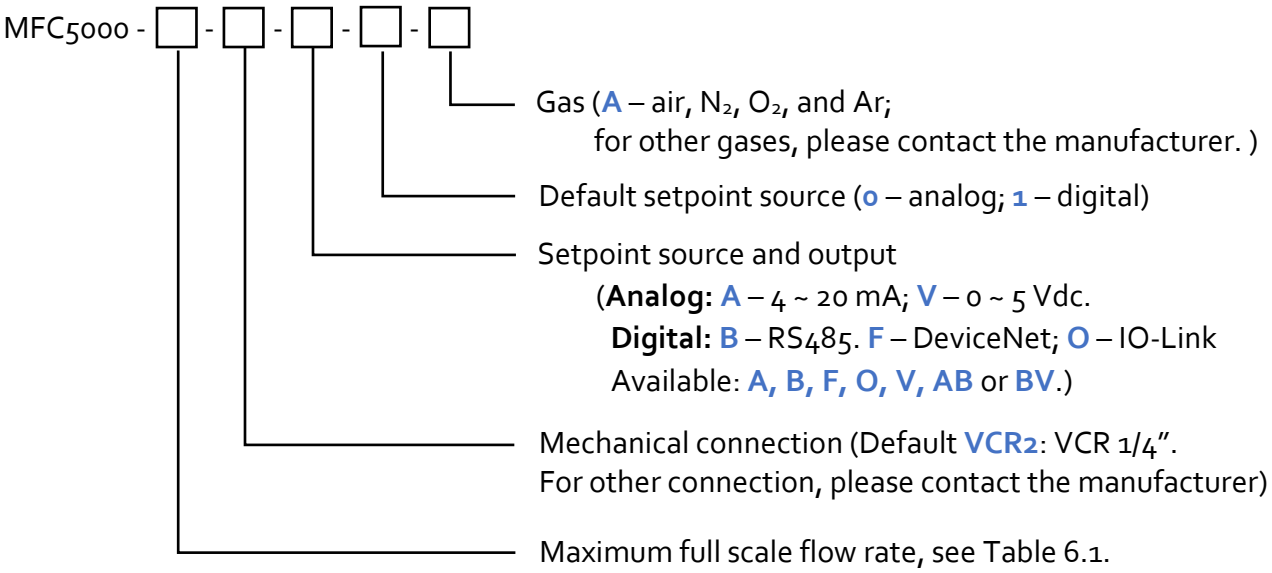

MFC5000 is the model number. The default reference condition is 0°C, 101.325kPa.

The default unit is sccm or SLPM, depending on the order code.

Table 6.1: Maximum Full-scale Flowrate and Mechanical Connection.

Maximum full-scale flow rate		Mechanical connection
0005	0...5 sccm	**U7** - 7/16-20UNF **VCR2** - VCR 1/4" The default connection is VCR2.
0010	0...10 sccm	
0020	0...20 sccm	
0050	0...50 sccm	
0100	0...100 sccm	
0200	0...200 sccm	
0500	0...500 sccm	
1000 / 001	0...1000 sccm / 0...1 SLPM	
2000 / 002	0...2000 sccm / 0...2 SLPM	
5000 / 005	0...5000 sccm / 0...5 SLPM	
010	0...10 SLPM	
020	0...20 SLPM	

* The four-digit number is for sccm, while a three-digit number is for SLPM.

* For other ranges, please specify, for example, 0…50 sccm, the full-scale will be 0050; for others, please get in touch with the manufacturer.

For example, **MFC5000-0100-VCR2-F-1-A** is a model for 0…100 sccm, with a VCR connector, and DeviceNet digital interface, and applicable for air, nitrogen, oxygen, or argon.

MFC5000-2000-U7-BV-1-A is a model for 0…2000 sccm, featuring a 7/16-20UNF female connector. It outputs analog 0~5Vdc and digital RS485 Modbus, with the default setpoint source being digital (RS485 Modbus). It is applicable for air, nitrogen, oxygen, or argon.

For other interfaces, such as ProfiNet, please get in touch with the manufacturer. These interfaces will be the standard offer in due course. Please check back at www.Siargo.com for updates and additional information.

[Blank]

7 Technical specifications

All specifications listed in the following table, unless otherwise noted, apply for calibration conditions at 0 °C and 101.325 kPa absolute pressure with air. The product is horizontally mounted during calibration.

	Value	Unit
Full-scale range	0 ~ 50 sccm ... 0 ~ 1000 sccm 0 ~ 2 ... 0 ~ 20 SLPM	
Accuracy	± 1.0% r.d. (20 ~ 100% of full scale) ±0.2% f.s. (<20% of full scale)	
Repeatability	± 0.5% r.d. (20 ~ 100% of full scale) ±0.1% f.s. (<20% of full scale)	
Turn-down ratio	100:1	
Max control range	1~110	%FS
Control pressure range	0.1 ~ 0.8	MPa
Maximum operating differential pressure	0.4	MPa
Setpoint source (input signal)	Analog: 0 ~ 5 Vdc or 4 ~ 20 mA Digital: DeviceNet, RS485 Modbus	
Control time (typical)	300	msec
Working temperature	0 ~ 55	°C
Humidity	<95, no condensation	%RH
Burst pressure	1.5	MPa
Max pressure loss	20 (20 SLPM models)	kPa
External leakage rate	≤1 x 10^{-9} (He)	Pa·m^3 /s
Power supply	(12 ~ 24) Vdc, 1A	
Output signal	Analog: 0 ~ 5 Vdc or 4 ~ 20 mA Digital: DeviceNet, RS485 Modbus	
Max null shift (analog)	±30	mVdc
Control valve	Normally Closed (NC)	
Electrical connector	M12, DB9	
Mechanical connection	VCR; or BSPT 1/8" to 1/2"-female	
Protection	IP40	
Storage temperature	-20 ~ +70	°C
Reference conditions	0 °C, 101.325 kPa, air	
Fluid compatibility	Non-corrosive: SS 316, SiNx	
CE	EN61000-2; -3; -4	
Environmental	RoHS, REACH	

*For the other digital interface, please contact the manufacturer.

8 Technical Notes for the Product Performance

8.1 Measurement Principle

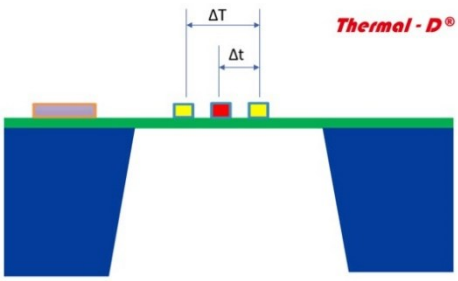

Figure 8.1: Measurement approach illustration.

The products utilize the Company's proprietary micro-machined (MEMS) thermal calorimetric sensing with time-domain data and data processing technology. A thermal signal generator with a pair of sensing elements upstream and downstream of the microheater is precisely manufactured and separated at predefined micrometer distances on a chip surface with excellent thermal isolation. When a fluid flows through the sensing chip, the fluid carries the thermal signal downstream. The sensing elements register the amplitude, time, and temperature differences, calculating the thermal diffusivity and further correlating it to the fluid mass flow rate via the calibration process.

This unique thermal sensing approach offers an extensive dynamic range with better performance against environmental parameter alterations. It is the first of its kind in the industry that provides gas property independent mass flow measurements for gases with similar thermal diffusivities. It significantly simplifies process control with high precision and easy maintenance. Please refer to the company's US patents and other publications made available to the public for additional information.

8.2 Precautions for the Best Performance of the Product

8.2.1 Comparison with a Third-party Reference Meter

It is a general practice for users to compare the product's data with that of a third-party reference meter, which may reveal discrepancies in many cases.

When performing such a comparison, please note that the reference meter should have a better-specified accuracy (about 1/3 of the product), and pay special attention to the differences in the reading accuracy and full-scale accuracy.

A full-scale accuracy = reading accuracy x (full-scale flow rate/ set point (current) flow rate)

Another key point to comparing the different flow meters is that as long as the fluidic flow is a continuous flow without pulsation, then the fluid dynamics will have the system following the Bernoulli equation:

$$P_1 + \frac{1}{2}\rho v_1^2 + \rho g h_1 = P_2 + \frac{1}{2}\rho v_2^2 + \rho g h_2$$

Where ρ is the fluid density, g is the acceleration due to gravity, P_1 is the pressure of the reference meter, P_2 is the pressure at the test meter, v_1 is the velocity of the reference meter, and v_2 is the velocity of the test meter. h_1 and h_2 are the corresponding heights for the meters, which are generally the same in the system. Therefore, it would be very critical for the system to have no pressure variation. (This explains our recommendations for the installations in Section 4). Also, the meter measurement principle is often very important for the understanding of any discrepancies.

Please note that for comparison with a rotameter, the reading could have large deviations due to the different measurement principles, in particular, as a rotameter is sensitive to pressure and temperature variations.

8.2.2 Particle Contamination and Fluidic Cleanness

Any contamination, including particles and liquid vapors, would be detrimental to the accuracy of the flow measurement and also to the meter functionality. It is important to ensure that the applied flow medium will be clean and dry. If any contamination is suspected, please allow experienced technical personnel to have it checked and reconditioned. Do not use a foreign cleanser or other fluids to clean the flow path, which could bring irreparable damage.

8.2.3 Apply to a Different Gas Medium

The product is calibrated with a high-precision NIST traceable metrological standard with clean and dry air. Thanks to the unique thermal sensing technology, the product can be applied to measure and control other clean and dry gases with similar thermal diffusivities without losing accuracy. It effectively solves the nonlinearity issues of applying a gas conversion factor in calorimetric sensing, making the measurement highly accurate in a large dynamic range. Gases that can be applied include air, N_2, O_2, Ar, CH_4, and CO.

This innovative product also follows the basic sensing principle described in the international standard for thermal mass flow meters (ISO 14511:2001 - Measurement of fluid flow in closed conduits — Thermal mass flowmeters). For gases with different diffusivities, a gas conversion factor could be applied. Please contact your sales representative or manufacturer for additional information.

Under normal operation conditions, the wetted materials are fully compatible with common gases, such as air, oxygen, nitrogen, argon, and carbon dioxide. If a special gas is applied, please check back with the manufacturer for gas compatibility analysis. In some cases, some package materials may

need to be changed for gas compatibility, or additional hazardous zone certification will be needed before the products can be used.

8.2.4 Recalibration and Maintenance

The recalibration of the controller will depend on the usage and application requirements, and therefore, it is more of a decision by the applications.

If preferred, Siargo can offer free calibration software or a user application kit to facilitate the customer's calibration requirements. Alternatively, please contact your sales representative or directly contact the manufacturer for assistance. Siargo calibrates all products with NIST (National Institute of Standards and Technology, USA) traceable calibrators.

For maintenance, the services must be performed by trained or certified technicians from Siargo. Any arbitrary changes to the products will nullify the warranty of the products. It could lead to irreparable damage to the products and could even lead to unexpected injuries.

The products do not require regular maintenance if the specified application conditions are exactly observed. Only if there are clear indications of contamination and/or malfunctions would maintenance be required. Once this happens, please contact your sales representative or directly contact customer support (information available on the Company's webpage) to obtain an RMA (Return Materials Authorization) before shipping the products back to the Company's support center. Siargo commits to respond as quickly as possible, and normal service will be completed within 5 business days if no major parts changes are required.

9 Troubleshooting

Phenomena	Possible causes	Actions
No signal	The power is not connected.	Connect the power, and check the cable.
	Cable connection incorrect	Check the cable.
	No flow or clogging	Check the flow and contamination.
	Power regulator failure	Return to the factory.
	Sensor failure	Return to the factory.
Significant errors or unexpected flow rate	Particles, fluid type	Check the system.
Erroneous or large noise	Vibration, unstable flow	Check the system.
Valve not work	Wire connection, valve	Return to the factory.
Offset unstable	Circuitry instability	Check the system, and power off
No digital interface	Wrong address, software	Check commands, connection

10 Warranty and Liability

(Effective January 2018)

Siargo warrants the products sold hereunder, when properly used and properly installed under normal circumstances and service. As described in this user manual, it shall be free from faulty materials or workmanship for 180 days for OEM products and 365 days for non-OEM products from the date of shipment. This warranty period is inclusive of any statutory warranty. Any repair or replacement of a serviced product shall bear the same terms in this warranty.

Siargo makes no warranty, representation, or guarantee and shall not assume any liability regarding the suitability of the products described in this manual for any purposes that are not specified in this manual. The users shall be held fully responsible for validating the performance and suitability of the products for their particular design and applications. For any misuse of the products out of the scope described herein, the user shall indemnify and hold Siargo and its officers, employees, subsidiaries, affiliates, and sales channels harmless against all claims, costs, damages, expenses, or reasonable attorney fees from direct or indirect sources.

Siargo makes no other warranty, express or implied, and assumes no liability for any special or incidental damage or charges, including but not limited to any damages or charges due to installation, dismantling, reinstallation, etc., or consequential or indirect damages of any kind. To the extent permitted by law, the exclusive remedy of the user or purchaser, and the limit of Siargo's liability for any and all losses, injuries, or damages concerning the products, including claims based on contract, negligence, tort, strict liability, or otherwise shall be the return of products to Siargo, and upon verification of Siargo to prove to be defective, at its sole option, to refund, repair or replacement of the products. Regardless of form, no action may be brought against Siargo more than 365 days after a cause of action has accrued. The products returned under warranty to Siargo shall be at the user's or purchaser's risk of loss and will be returned, if at all, at Siargo's risk of loss. Purchasers or users are deemed to have accepted this limitation of warranty and liability, which contains the complete and exclusive limited warranty of Siargo. It shall not be amended, modified, or its terms waived except by Siargo's sole action.

This manual's product information is believed to be accurate and reliable at the time of release or when made available to the users. However, Siargo shall assume no responsibility for any inaccuracies and/or errors and reserves the right to make changes without further notice for the relevant information herein.

This warranty is subject to the following exclusions:

(1) Products that have been altered, modified, or have been subject to unusual physical or electrical circumstances, as indicated, but not limited to those stated in this document or any other actions which cannot be deemed as proper use of the products;

(2) Products that have been subject to chemical attacks, including exposure to corrosive substances or contaminants. In the case of battery usage, long-term discharge, or leakage-induced damage;
(3) Products that have been opened or dismantled for whatever reason;
(4) Products that have been subject to working conditions beyond the technical specification as described by this manual or related datasheet published by the manufacturer;
(5) Any damages incurred by the incorrect usage of the products;
(6) Siargo does not provide any warranty on finished goods manufactured by others. Only the original manufacturer's warranty applies.
(7) Products that unauthorized dealers or any third parties resell.

11 Service/Order Contact and Other Information

Siargo Ltd. is making every effort to ensure the quality of its products. For questions or product support, please get in touch with your direct sales representative. If you need additional assistance, please get in touch with customer service at the address listed below. We will respond to your request in a timely fashion and work with you toward your complete satisfaction.

For sales or product orders, please get in touch with the local sales representatives or distributors listed on the company's webpage: www.Siargo.com.

For any returns, please get in touch with your direct sales representative to obtain an RMA. In case you need any further assistance, please contact info@siargo.com to obtain additional information or a Return Materials Authorization (RMA) before shipping the product back to the factory for factory services such as calibration. Please specify in your email message the product's status as clearly as possible, indicating your intention to return it to the factory, and include your shipping address. Be sure to write the RMA on the returned package or include a letter with the RMA information.

Direct customer service request(s) should be addressed to

Siargo Ltd.
4677 Old Ironsides Drive, Suite 310,
Santa Clara, California 95054-1857, USA
Tel: +1(408)969-0368
Email: Info@Siargo.com

For further information and updates, please visit www.Siargo.com.

Appendix I: Product Evaluation and Diagnosis Kit

Siargo offers a product evaluation kit that includes a digital data converter, USB data cable, and User Application software. This kit allows users to evaluate the product's performance on a Microsoft Windows-based computer. For some simple applications or evaluations with a digital data interface, this kit could serve the purpose. The user can read and visualize the delivered flow rate, input the set point, obtain the totalizer or accumulated flow rate values, and save the data for further analysis. It can read from up to 128 products with the RS485 interface in serial.

For further information and to purchase the evaluation kit, please get in touch with the manufacturer or the sales representative.

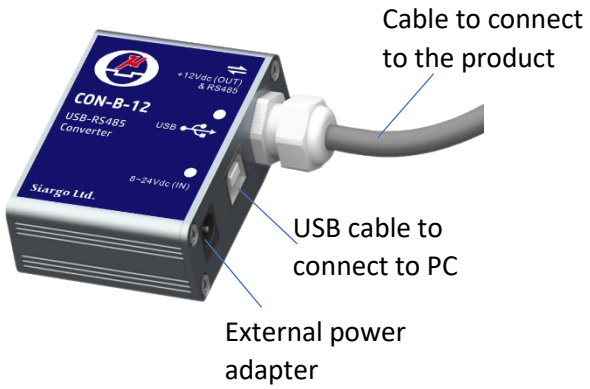

Each converter has a fixed cable that can be directly connected to the product's service port. The USB cable to the PC is also included.

Because the proportional valve requires high power, an external power supply will be required. Please connect and plug in the supplied power adapter to ensure the evaluation can be performed appropriately. If a different power adapter is used, please be cautious regarding the safety compliance of the adapter.

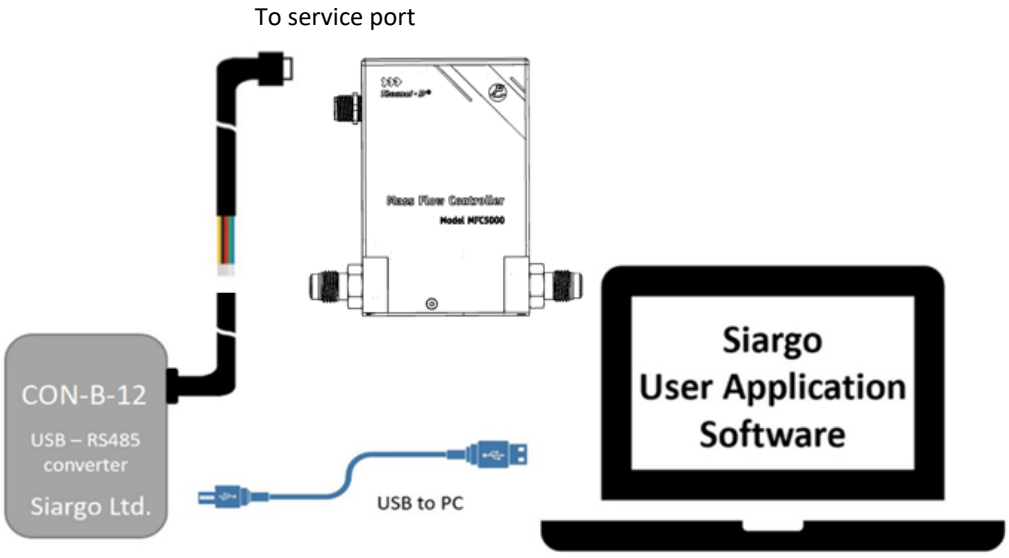

Appendix II: Document history

Revision VA.1.02 (December 2025)

- Add external leakage rate.

Revision VA.1.01 (August 2025)

- Add evaluation and service port information.
- Corrections.

Revision VA.1 (September 2024)

- Updates.

Revision VA.0 (April 2024)

- Initial release.