XGZP6886A PRESSURE SENSOR

FEATURES

- Wide Ranges: 0 ~ 100···1000kPa(show in Pressure Range Example)
- Absolute Pressure Type
- For Non-corrosive Gas or Air or Liquid
- Calibrated Amplified Analog Signal
- Temp. Compensated: 0℃ ~ +85℃(32℉ ~ +185℉)
- Direct Application,Low Cost.
- Customization available

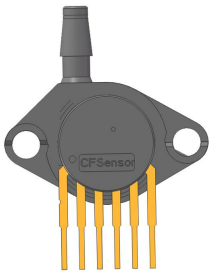

APPLICATIONS

- Tank level measurement, Water and Liquid level measurement etc,.
- Engine control/manifold absolute pressure (MAP), Oil pressure etc,.
- Medical gas control system, Hospital beds, Medical device etc,.
- Weather station, Barometers, Altitude measurement etc,.
- Vacuum measurement, Industrial controls etc,.

INTRODUCTION

XGZP6886A is a prefect silicon pressure sensor offering a ratiometric analog interface for reading absolute pressure over the specified full scale pressure span and temp.range.

The XGZP6886A incorporates a silicon piezoresistive pressure sensor chip and an interior signal-conditional Application Specific Integrated Circuit(ASIC) in a SIP package with long 6 PIN, which can be mounted freely from different direction .

The XGZP6886A is fully calibrated and temperature compensated for offset,sensitivity, temperature and non-linearity, so XGZP6886A pressure sensor satisfy the prefect repeatability,linearity, stability and sensibility, which can be applied directly in medical&healthy, home appliances, consumer electronic, industry, automotive, IoT and other pneumatic devices etc

XGZP6886A pressure sensor is for high volume application at an affordable cost and perfect performance.

Customized calibrations(working voltage,output voltage,and pressure range) are available.

PERFORMANCE SPECIFICATION

Unless otherwise specified, measurements were taken with a a temperature of 25±1℃ and humidity from 25% ~ 85%RH

CHARACTERISTIC		MIN.	TYP.	MAX	UNIT
Available Pressure Range①			0 ~ 100…700		kPa
Power Supply②		4.75	5	5.25	Vdc
		3	3.3	3.6	Vdc
Current Consumption		-	2	-	mA
Output Range③	5Vdc Power Supply		0.2 ~ 4.7		Vdc
	3.3Vdc Power Supply		0.2 ~ 2.7		Vdc
Total Accuracy		-	-	±2.5	%FSS
Long Term Stability(1000 hr, 25°C)		-	-	±0.5	%FSS
Over Pressure④	Pressure ≤200kPa	-	2.5X	-	FSS
	200kPa < Pressure	-	-	1.5X	FSS
Burst Pressure④	Pressure ≤200kPa	-	3X	-	FSS
	200kPa < Pressure	-	-	2X	FSS
Compensation Temperature		0	-	60	℃
Operating Temperature		-30	-	105	℃
Storage Temperature		-40	-	125	℃
ESD Protection(Human Body Mode)		-	±2000	-	V
Response Time(T90)		-	2.5	-	mS

① The range cover all pressure ranges as shown as "PRESSURE RANGE EXAMPLE" list.

② Sensors are either 3.3 Vdc or 5.0 Vdc based on the "ORDER GUIDE" selected; and overload voltage(6.5Vdc above) or current(5mA above) may burn the IC and cause the sensor fail thoroughly.

③ The output value is achieved within the specified operating voltage, contact CFSensor for customized output if required.

④ The indicated value is widespread value, contact CFSensor for more information on specific pressure range.

BLOCK DIAGRAM

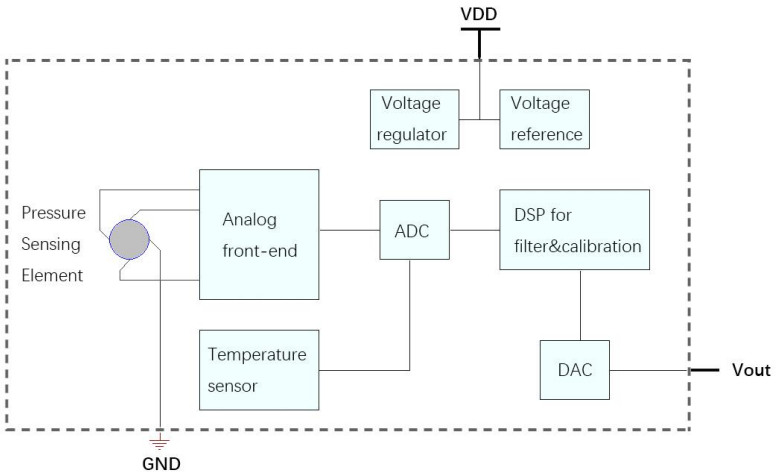

DIMENSION (Unit:mm Unspecified Tolerances:±0.1mm)

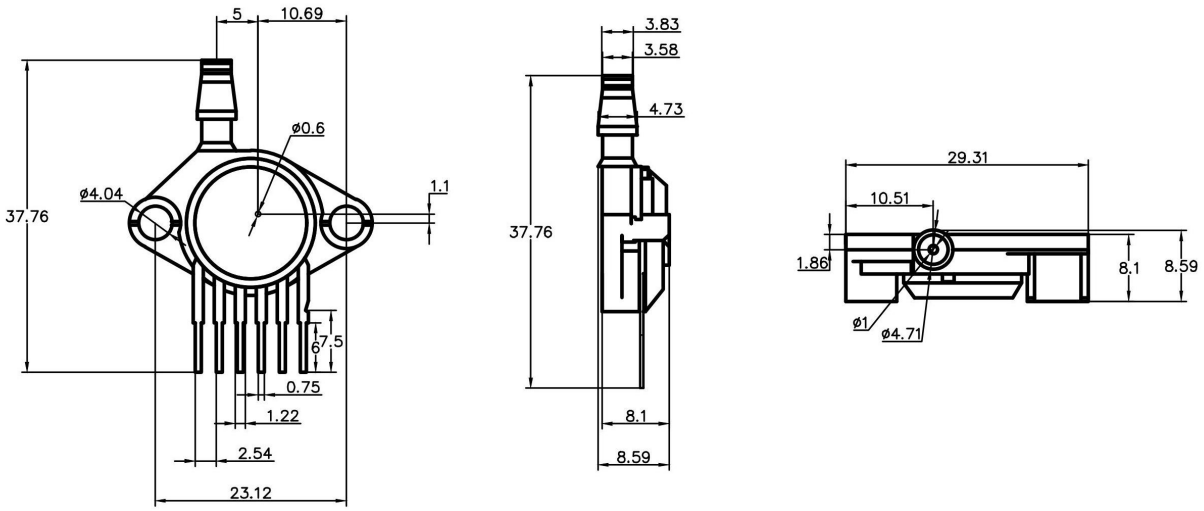

PIN DEFINITION

PIN1	PIN2	PIN3	PIN4	PIN5	PIN6
OUT	GND	VDD	N/C	N/C	N/C

N/C	Do not connect to external circuitry or ground
VDD	Voltage supply
GND	Ground
OUT	Output voltage

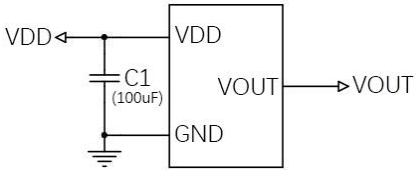

Recommended Application Circuit

FOOTPRINT(Unit:mm)

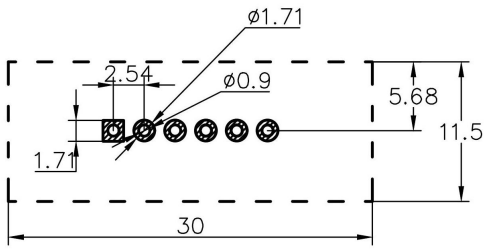

NOTE: FOOTPRINT LAYOUT FOR REFERENCE ONLY

CONTACT CFSensor FOR ABOVE FILE IF REQUIRED

ORDER GUIDE

XGZP6886 A 00100 KP A --

- -- : Operation Voltage(Default: 5Vdc 33: 3.3Vdc)
- A : Pressure Type(A: Absolute)
- KP : Pressure Unit(KP: kPa BA:Bar MP:MPa)
- 00100 : Pressure Range(000-999)
- A : Output Signal(A: Analog D:I2C)
- XGZP6886 : Series

Note: Output 0.2 ~ 4.7V as default output under 5V voltage, for specific output like 0.2~4.9V or other, add output figure behind part number, e.g. : XGZP6886A20250KPA0249. Consult with CFSensor for more information

PRESSURE RANGE EXAMPLE

Notes: 1. Unit conversion: 1000hPa=1000mbar≈750mmHg≈100kPa≈14.5PSI≈10mH_2O≈1bar=0.1MPa;
2. Available for more custom pressure range.

Pressure Range(kPa)	Part Number	
00 ~ 100kPa	XGZP6886A00100KPA	0.2~4.7V@5V
15 ~ 115kPa	XGZP6886A15115KPA	0.2~4.7V@5V
00 ~ 250kPa	XGZP6886A00250KPA0249	0.2~4.7V@5V
00 ~ 700kPa	XGZP6886A00700KPA	0.2~4.7V@5V
15 ~ 115kPa	XGZP6886A15115KPA0248	0.2~4.8V@5V
★Above P/N is example only, consult CFSensor whether required pressure range is under normal production before place order.		

PACKING INFORMATION

Packing	Tray	Inner Box	Outer Box	Note
Quantity	45PCS per Tray	135pcs(3pcs Tray)	1080pcs(6pcs Inner Box)	Anti-static bag

Note: 1,The sensor should be stored in an ESD protective container before using them.
2, The packing information may be not quite same with above for other different quantity and samples.

OVERALL NOTES

Unless otherwise specified, following notes are general attention or presentation for all products from CFSensor.

Mounting

The following steps is for transmitting the air pressure to sensor after sensor soldering on PCB.

▼ For some sensors that come with inlet tube, select the flexible pipe to suit the pressure inlet that is firm enough to prevent the pressure leaks.

▼ Atmosphere hole (for Gauge type sensors) and Inlet pipe/hole can't be blocked with gel or glue etc,..

▼ Avoiding excessive external force operation

Soldering

Due to its small size, the thermal capacity of the pressure sensor is low. Therefore, take steps to minimize the effects of external heat. Damage and changes to characteristics may occur due to heat deformation. Use a non-corrosive resin type of flux. Since the pressure sensor is exposed to the atmosphere, do not allow flux to enter inside.

▼ Manual soldering

⊙Raise the temperature of the soldering tip between 260 and 300°C/500 and 572°F (30 W) and solder within 5 seconds.

⊙The sensor output may vary if the load is applied on the terminal during soldering.

⊙Keep the soldering tip clean.

▼DIP soldering (DIP Terminal)

⊙Keep the temperature of the DIP solder tank below 260°C/500 and solder within 5 seconds.

⊙To avoid heat deformation, do not perform DIP soldering when mounting on the PCB which has a small thermal capacity.

▼Reflow soldering (SMD Terminal)

⊙The recommended reflow temperature profile conditions are given below.

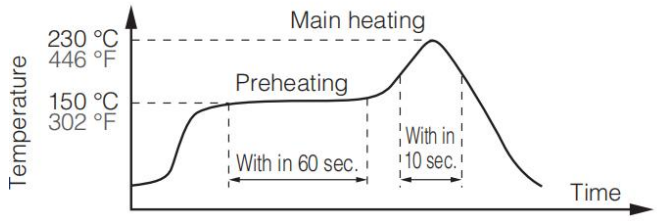

⊙Self alignment may not always work as expected, therefore, please carefully note the position of the terminals and pattern.

⊙The temperature of the profile is assumed to be a value measured with the printed circuit board of the terminal neighborhood.

⊙Please evaluate solderbility under the actual mounting conditions since welding and deformation of the pressure inlet port may occur due to heat stress depending on equipments or conditions.

▼ Rework soldering

⊙Complete rework at a time.

⊙Use a flattened soldering tip when performing rework on the solder bridge. Do not add the flux.

⊙Keep the soldering tip below the temperature described in the specifications.

▼ Avoid drop and rough handling as excessive force may deform the terminal and damage soldering characteristics.

▼ Keep the circuit board warpage within 0.05 mm of the full width of the sensor.

▼ After soldering, do not apply stress on the soldered part when cutting or bending the circuit board.

▼ Prevent human hands or metal pieces from contacting with the sensor terminal. Such contact may cause anomalous outlets as the terminal is exposed to the atmosphere.

▼ After soldering, prevent chemical agents from adhering to the sensor when applying coating to avoid insulation deterioration of the circuit board.

Connecting

▼ Correctly wire as in the connection diagram. Reverse connection may damage the product and degrade the performance.

▼ Do not use idle terminals(N/C) to prevent damages to the sensor.

Cleaning

▼ Since the pressure sensor is exposed to the atmosphere, do not allow cleaning fluid to enter inside from atmosphere hole (for Gauge type sensors) and inlet pipe.

▼ Avoid ultrasonic cleaning since this may cause breaks or disconnections in the wiring.

Environment

▼Please avoid using or storing the pressure sensor in a place exposed to corrosive gases (such as the gases given off by organic solvents, sulfurous acid gas, hydrogen sulfides, etc.) which will adversely affect the performance of the pressure sensor chip.

▼Since this pressure sensor itself does not have a water-proof construction(even available media can be liquid), please do not use the sensor in a location where it may be sprayed with water, etc.

▼Avoid using the pressure sensors in an environment where condensation may form. Furthermore, its output may fluctuate if any moisture adhering to it freezes.

▼The pressure sensor is constructed in such a way that its output will fluctuate when it is exposed to light. Especially when pressure is to be applied by means of a transparent tube, take steps to prevent the pressure sensor chip from being exposed to light.

▼Avoid using pressure sensor where it will be susceptible to ultrasonic or other high-frequency vibration.

▼Keeping the sensors sealed in static shielding bags with an oxygen-free condition and use the sensor as soon as possible once unfold the package, because the sensors' PINs may be oxidated a bit under atmosphere environment(slight oxidation wouldn't affect soldering and performance)

More Precautions

▼That using the wrong pressure range or mounting method may result in accidents.

▼The only direct pressure medium you can use is non-corrosive gas or air as illuminated above(Note: some sensors are compatible with liquid media). The use of other media, in particular, corrosive gases and liquid (organic solvent based, sulfurous acid based, and hydrogen sulfide based, etc.) or contains foreign substances will cause malfunction and damage. Please do not use them and check with CFSensor.

▼The pressure sensor is positioned inside the pressure inlet. Never poke wires or other foreign matter through the pressure inlet since they may damage the sensor or block the inlet. Avoid use when the atmospheric pressure inlet(only for Gauge type pressure sensor) is blocked.

▼Use an operating pressure which is within the rated pressure range. Using a pressure beyond this range may cause damage.

▼Since static charge can damage the pressure sensor, bear in mind the following handling precautions.

⊙When storing the pressure sensor, use a conductive material to short the pins or wrap the entire sensor in aluminum foil. Common plastic containers should not be used to store or transport the sensor since they readily become charged.

⊙When using the pressure sensor, all the charged articles on the bench surface and the work personnel should be grounded so that any ambient static will be safely discharged.

▼Based on the pressure involved, give due consideration to the securing of the pressure sensor.

【 SAFETY NOTES 】

Using these sensors products may malfunction due to external interference and surges, therefore, please confirm the performance and quality in actual use. Just in case, please make a safety design on the device (fuse, circuit breaker, such as the installation of protection circuits, multiple devices, etc.), so it would not harm life, body, property, etc even a malfunction occurs. To prevent injuries and accidents, please be sure to observe the following items:

- The driving current and voltage should be used below the rated value.
- Please follow the terminal connection diagram for wiring. Especially for the reverse connection of the power supply, it will cause an accident due to circuit damage such as heat, smoke, fire, etc.
- In order to ensure safety, especially for important uses, please be sure to consider double safety circuit configuration.
- Do not apply pressure above the maximum applied pressure. In addition, please be careful not to mix foreign matter into the pressure medium. Otherwise, the sensor will be discarded, or the media will blew out and cause an accident.
- Be careful when fixing the product and connecting the pressure inlet. Otherwise, accidents may occur due to sensor scattering and the blowing out of the media.
- If the sensor come with sharp PIN, please be careful not to hurt your body when using it.

【 WARRANTY 】

The information in this sheet has been carefully reviewed and is believed to be accurate; however, no responsibility is assumed for inaccuracies. Furthermore, this information does not convey to the purchaser of such devices any license under the patent rights to the manufacturer. CFSensor reserves the right to make changes without further notice to any product herein. CFSensor makes no warranty, representation or guarantee regarding the suitability of its product for any particular purpose, nor does CFSensor assume any liability arising out of the application or use of any product or circuit and specifically disclaims any and all liability, including without limitation consequential or incidental damages. Typical parameters can and do vary in different applications. All operating parameters must be validated for each customer application by customer's technical experts. CFSensor does not convey any license under its patent rights nor the rights of others.

【 CONTACT 】

CFSensor

22F/14Bldg High-Tech Park High-Tech Area Wuhu P.R.C.241000

Tel/Fax:+86 18226771331 Email:INFO@CFSensor.com

North America II Europe II Southeast Asia II Middle East II Latin America