XGZP6897A PRESSURE SENSOR

FEATURES

- Wide Ranges: -100kPa···-0.5 ~ 0 ~ 0.5···200kPa(show in Pressure Range Example)
- Differential Pressure Type
- For Non-corrosive Gas or Air
- Optional 5V and 3.3V Voltage
- Calibrated Amplified Analog Signal(Refer to XGZP6897D for I2C interface)
- Temp. Compensated: 0℃ ~ +60℃(32℉ ~ +140℉)
- Direct Application, Low Cost.

APPLICATIONS

- Medical&Healthcare
- Industrial&Automation
- Domestic Appliance
- Consumer Electronic
- Automotive Electronic

INTRODUCTION

XGZP6897A is a prefect silicon pressure sensor offering a ratiometric analog interface for reading differential pressure over the specified full scale pressure span and temp.range.

The XGZP6897A incorporates a silicon piezoresistive pressure sensor chip and an interior signal-conditional Application Specific Integrated Circuit(ASIC) in a SOP8 package with two air vents, which can be mounted directly on a standard PCB.

The XGZP6897A is fully calibrated and temperature compensated for offset,sensitivity, temperature and non-linearity,so XGZP6897A pressure sensor satisfy the prefect repeatability,linearity, stability and sensibility, which can be applied directly in medical&healthy, home appliances, consumer electronic, industry, automotive, IoT and other pneumatic devices etc

XGZP6897A pressure sensor is for high volume application at an affordable cost and perfect performance.

Customized calibrations(working voltage,output voltage,and pressure range) are available.

PERFORMANCE SPECIFICATION

Unless otherwise specified, measurements were taken with a temperature of 25±1℃ and humidity from 25% ~ 85%RH

CHARACTERISTIC		MIN.	TYP.	MAX	UNIT
Available Pressure Range①		-100…-0.5 ~ 0 ~ 0.5…200			kPa
Power Supply②		4.75	5	5.25	Vdc
		3	3.3	3.6	Vdc
Current Consumption		-	2	-	mA
Output Range③	5Vdc Power Supply	0.5 ~ 4.5			Vdc
	3.3Vdc Power Supply	0.2 ~ 2.7			Vdc
Total Accuracy	10kPa < Pressure ≤200kPa	-	-	±2	%FSS
	Pressure ≤10kPa or > 200kPa	-	-	±2.5	%FSS
Offset Drift after Soldering		-	-	±1	%FSS
Long Term Stability(1000 hr, 25°C)		-	-	±0.5	%FSS
Over Pressure④	Pressure ≤5kPa	-	5X	-	FSS
	5kPa < Pressure ≤200kPa	-	2.5X	-	FSS
Burst Pressure④	Pressure ≤5kPa	-	10X	-	FSS
	5kPa < Pressure ≤200kPa	-	3X	-	FSS
Pressure on P2 Port(Common mode pressure)		-	-	250	kPa
Compensation Temperature		0	-	60	℃
Operating Temperature		-30	-	100	℃
Storage Temperature		-40	-	125	℃
ESD Protection(Human Body Mode)		-	±2000	-	V
Response Time(T90)		-	2.5	-	mS

① The range cover all pressure ranges as shown as "PRESSURE RANGE EXAMPLE" list.

② Sensors are either 3.3 Vdc or 5.0 Vdc based on the "ORDER GUIDE" selected; and overload voltage(6.5Vdc above) or current(5mA above) may burn the IC and cause the sensor failure thoroughly.

③ The output value is achieved within the specified operating voltage, contact CFSensor for customized output if required.

④ The indicated value is widespread value, contact CFSensor for more information on specific pressure range.

BLOCK DIAGRAM

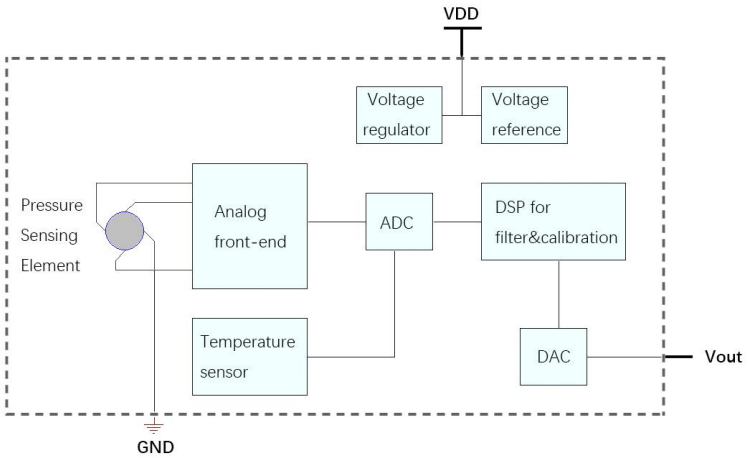

DIMENSION(Unit:mm Unspecified Tolerances:±0.1mm)

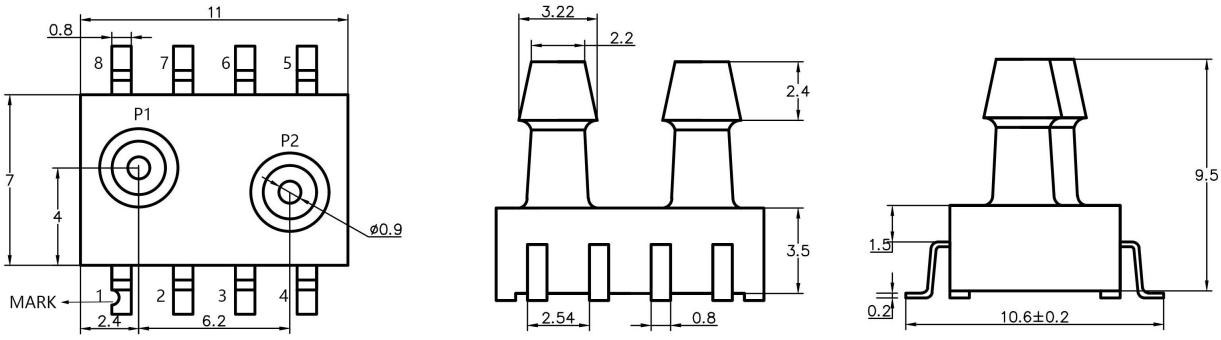

Note: Port 1(P1) as High pressure cavity, and Port 2(P2) as Low pressure cavity.

PIN DEFINITION

PIN2	PIN3	PIN8	PIN1/4/5/6/7
VDD	OUT	GND	N/C

N/C	Do not connect to external circuitry or ground
VDD	Voltage supply
GND	Ground
OUT	Output voltage

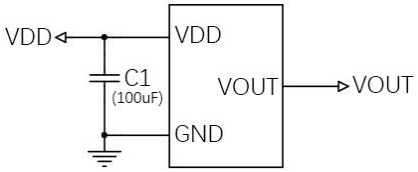

Recommended Application Circuit

FOOTPRINT(Unit:mm)

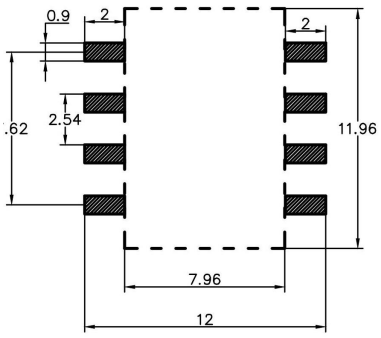

NOTE: FOOTPRINT LAYOUT FOR REFERENCE ONLY, CONTACT CFSENSOR FOR ABOVE FILE IF REQUIRED.

ORDER GUIDE (100kPa=0.1MPa=1bar≈14.5PSI)

XGZP6897 A 001 KP DPN --

- -- : Operation Voltage(Default: 5Vdc 33: 3.3Vdc)
- DPN : Pressure Type(DG:Gauge(Positive) DN:Negative DPN: N+P)
- KP : Pressure Unit(KP: kPa HP:hPa)
- 001 : Pressure Range(000-999)
- A : Output Signal(A: Analog D:I2C)
- XGZP6897 : Series

Note: Custom requirement or parameter(e.g pressure range, output etc,.), consult with CFSensor on Part Number.

PRESSURE RANGE EXAMPLE

Notes: 1. Unit conversion: 1000hPa==100kPa=0.1MPa=1000mbar=1bar≈750mmHg≈14.5PSI≈10mH_2O;
2. Available for more custom pressure range e.g. -7 ~ 7kPa, , 0 ~ -250Pa etc,.

Pressure Range(kPa)	Pressure Range(by other units)	Part Number(5V Power supply)	Part Number(3.3V Power supply)
-0.5 ~ 0.5	-5 ~ 5mbar / -500 ~ 500Pa	XGZP6897A005HPDPN	XGZP6897A005HPDPN33
-1 ~ 1	-10 ~ 10mbar / -100 ~ 100mH_2O	XGZP6897A001KPDPN	XGZP6897A001KPDPN33
-2.5 ~ 2.5	-25 ~ 25mbar / -250 ~ 250mH_2O	XGZP6897A025HPDPN	XGZP6897A025HPDPN33
-5 ~ 5	-50 ~ 50mbar / -500 ~ 500mH_2O	XGZP6897A005KPDPN	XGZP6897A005KPDPN33
-50 ~ 50	-500 ~ 500mbar / -375 ~ 375mmHg	XGZP6897A050KPDPN	XGZP6897A050KPDPN33
-100 ~ 100	-1 ~ 1bar / -14.5 ~ 14.5PSI	XGZP6897A100KPDPN	XGZP6897A100KPDPN33
-100 ~ 200	-1 ~ 2bar / -14.5 ~ 29PSI	XGZP6897A200KPDPN	XGZP6897A200KPDPN33
-100 ~ 0	-1 ~ 0bar / -14.5 ~ 0PSI	XGZP6897A100KPDN	XGZP6897A100KPDN33
0 ~ 1	0 ~ 10mbar / 0 ~ 100mH_2O	XGZP6897A010HPDG	XGZP6897A010HPDG33
0 ~ 2.5	0 ~ 25mbar / 0 ~ 250mH_2O	XGZP6897A025HPDG	XGZP6897A025HPDG33
0 ~ 5	0 ~ 50mbar / 0 ~ 500mH_2O	XGZP6897A005KPDG	XGZP6897A005KPDG33
0 ~ 10	0 ~ 100mbar / 0 ~ 75mmHg	XGZP6897A010KPDG	XGZP6897A010KPDG33
0 ~ 20	0 ~ 200mbar / 0 ~ 150mmHg	XGZP6897A020KPDG	XGZP6897A020KPDG33
0 ~ 40	0 ~ 400mbar / 0 ~ 300mmHg	XGZP6897A040KPDG	XGZP6897A040KPDG33
0 ~ 50	0 ~ 500mbar / 0 ~ 375mmHg	XGZP6897A050KPDG	XGZP6897A050KPDG33
0 ~ 100	0 ~ 1bar /0 ~ 14.5PSI	XGZP6897A100KPDG	XGZP6897A100KPDG33

★Above P/N is example only, consult CFSensor whether required pressure range is under normal production before place order.

OUTPUT CURVE

Vacuum Pressure

Pressure value VS Output value

Model	100KPDN	020KPDN	010KPDN
Output(V)	Pressure（kPa）		
0.5	-100	-20	-10
1.5	-75	-15	-7.5
2.5	-50	-10	-5
3.5	-25	-5	-2.5
4.5	0	0	0

Curve(Output VS Pressure)

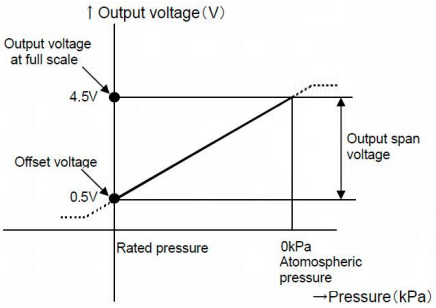

Pressure Conversion Formula

3.3V Power Supply: Pressure=(output-2.7)/K

5V Power Supply: Pressure=(output-4.5)/K

Pressure range & K value		
Range (kPa)	K value (3.3V)	K value (5V)
-10 ~ 0	0.25	0.4
-20 ~ 0	0.125	0.2
-40 ~ 0	0.0625	0.1
-100 ~ 0	0.025	0.04

Vacuum Pressure to Positive Pressure

Pressure value VS Output value

Model	005HPDPN	001KPDPN	025HPDPN
Output(V)	Pressure（kPa）		
0.5	-0.5	-1	-2.5
1.5	-0.25	-0.5	-1.25
2.5	0	0	-0
3.5	0.25	0.5	1.25
4.5	0.5	1	2.5

Curve(Output VS Pressure)

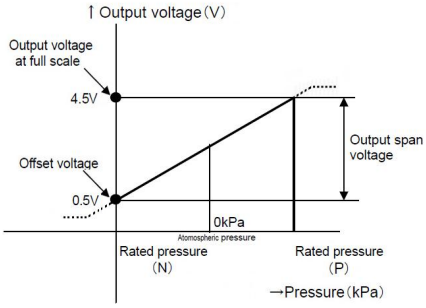

Pressure Conversion Formula

3.3V Power Supply: Pressure=(output-1.45)/K

5V Power Supply: Pressure=(output-2.5)/K

Pressure range & K value		
Range (kPa)	K value (3.3V)	K value (5V)
-0.5 ~ 0.5	2.5	4
-1 ~ 1	1.25	2
-2.5 ~ 2.5	0.5	0.8
-50 ~ 50	0.025	0.04

Positive Pressure

Pressure value VS Output value

Model	001KPDG	025HPDG
Output（V）	Pressure（kPa）	
0.5	0	0
1.5	0.25	0.625
2.5	0.5	1.25
3.5	0.75	1.875
4.5	1	2.5

Model	005KPDG	010KPDG	020KPDG	040KPDG	100KPDG	200KPDG
Output	Pressure（kPa）					
0.5	0	0	0	0	0	0
1.5	1.25	2.5	5	10	25	50
2.5	2.5	5	10	20	50	100
3.5	3.75	7.5	15	30	75	150
4.5	5	10	20	40	100	200

Curve(Output VS Pressure)

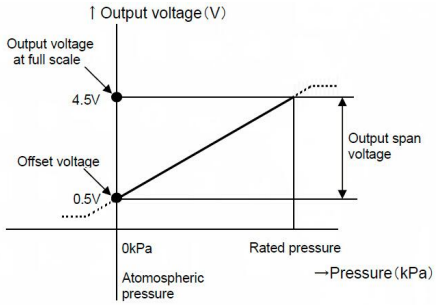

Pressure Conversion Formula

3.3V Power Supply: Pressure=(output-0.2)/K

5V Power Supply: Pressure=(output-0.5)/K

Pressure range & K value		
Range (kPa)	K value (3.3V)	K value (5V)
0~1	2.5	4.0
0~2.5	1	1.6
0~5	0.5	0.8
0~10	0.25	0.4
0~20	0.125	0.2
0~40	0.0625	0.1
0~100	0.025	0.04
0~200	0.0125	0.02

PACKING INFORMATION

The sensor should be stored in an ESD protective container before using them.

Packing	Plastic Tube	Inner Box	Note
Quantity	45PCS per tube	1800pcs(40pcs tube)	Anti-static bag

OVERALL NOTES

Unless otherwise specified, following notes are general attention or presentation for all products from CFSensor.

Mounting

The following steps is for transmitting the air pressure to sensor after sensor soldering on PCB.

▼ For some sensors that come with inlet tube, select the flexible pipe to suit the pressure inlet that is firm enough to prevent the pressure leaks.

▼ Atmosphere hole (for Gauge type sensors) and Inlet pipe/hole can't be blocked with gel or glue etc,..

▼ Avoiding excessive external force operation

Soldering

Due to its small size, the thermal capacity of the pressure sensor is low. Therefore, take steps to minimize the effects of external heat. Damage and changes to characteristics may occur due to heat deformation. Use a non-corrosive resin type of flux. Since the pressure sensor is exposed to the atmosphere, do not allow flux to enter inside.

▼ Manual soldering

⊙Raise the temperature of the soldering tip to 190°C max. and solder within 5 seconds.

⊙The sensor output may vary if the load is applied on the terminal during soldering.

⊙Keep the soldering tip clean.

▼Reflow soldering (SMD Terminal)

⊙ Considering the thermal effect on offset drift for the low pressure range, the Low Temperature Soldering curve are recommended as below.

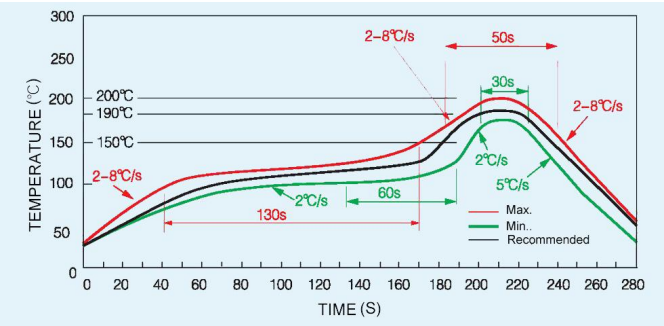

⊙Self alignment may not always work as expected, therefore, please carefully the position of the terminals and pattern.

⊙ The temperature of the profile is assumed to be a value measured with the printed wiring board of the terminal neighborhood.

⊙ Please evaluate solderability under the actual mounting conditions since welding and deformation of the pressure inlet port may occur due to heat stress depending on equipments or conditions.

▼ Rework soldering

⊙Complete rework at a time.
⊙Use a flattened soldering tip when performing rework on the solder bridge. Do not add the flux.
⊙Keep the soldering tip below the temperature described in the specifications.
▼ Avoid drop and rough handling as excessive force may deform the terminal and damage soldering characteristics.
▼ Keep the circuit board warpage within 0.05 mm of the full width of the sensor.
▼ After soldering, do not apply stress on the soldered part when cutting or bending the circuit board.
▼ Prevent human hands or metal pieces from contacting with the sensor terminal. Such contact may cause anomalous outlets as the terminal is exposed to the atmosphere.
▼ After soldering, prevent chemical agents from adhering to the sensor when applying coating to avoid insulation deterioration of the circuit board.

Connecting

▼ Correctly wire as in the connection diagram. Reverse connection may damage the product and degrade the performance.
▼ Do not use idle terminals(N/C) to prevent damages to the sensor.

Cleaning

▼ Since the pressure sensor is exposed to the atmosphere, do not allow cleaning fluid to enter inside from atmosphere hole (for Gauge type sensors) and inlet pipe.
▼ Avoid ultrasonic cleaning since this may cause breaks or disconnections in the wiring.

Environment

▼Please avoid using or storing the pressure sensor in a place exposed to corrosive gases (such as the gases given off by organic solvents, sulfurous acid gas, hydrogen sulfides, etc.) which will adversely affect the performance of the pressure sensor chip.
▼Since this pressure sensor itself does not have a water-proof construction(even available media can be liquid), please do not use the sensor in a location where it may be sprayed with water, etc.
▼Avoid using the pressure sensors in an environment where condensation may form. Furthermore, its output may fluctuate if any moisture adhering to it freezes.
▼The pressure sensor is constructed in such a way that its output will fluctuate when it is exposed to light. Especially when pressure is to be applied by means of a transparent tube, take steps to prevent the pressure sensor chip from being exposed to light.
▼Avoid using pressure sensor where it will be susceptible to ultrasonic or other high-frequency vibration.
▼Keeping the sensors sealed in static shielding bags with an oxygen-free condition and use the sensor as soon as possible once unfold the package, because the sensors' PINs may be oxidated a bit under atmosphere environment(slight oxidation wouldn't affect soldering and performance)

More Precautions

▼That using the wrong pressure range or mounting method may result in accidents.
▼The only direct pressure medium you can use is non-corrosive gas or air as illuminated above(Note: some sensors are compatible with liquid media). The use of other media, in particular, corrosive gases and liquid (organic solvent based, sulfurous acid based, and hydrogen sulfide based, etc.) or contains foreign substances will cause malfunction and damage. Please do not use them and check with CFSensor.

▼The pressure sensor is positioned inside the pressure inlet. Never poke wires or other foreign matter through the pressure inlet since they may damage the sensor or block the inlet. Avoid use when the atmospheric pressure inlet(only for Gauge type pressure sensor) is blocked.

▼Use an operating pressure which is within the rated pressure range. Using a pressure beyond this range may cause damage.

▼Since static charge can damage the pressure sensor, bear in mind the following handling precautions.

⊙When storing the pressure sensor, use a conductive material to short the pins or wrap the entire sensor in aluminum foil. Common plastic containers should not be used to store or transport the sensor since they readily become charged.

⊙When using the pressure sensor, all the charged articles on the bench surface and the work personnel should be grounded so that any ambient static will be safely discharged.

▼Based on the pressure involved, give due consideration to the securing of the pressure sensor.

【 SAFETY NOTES 】

Using these sensors products may malfunction due to external interference and surges, therefore, please confirm the performance and quality in actual use. Just in case, please make a safety design on the device (fuse, circuit breaker, such as the installation of protection circuits, multiple devices, etc.), so it would not harm life, body, property, etc even a malfunction occurs. To prevent injuries and accidents, please be sure to observe the following items:

●The driving current and voltage should be used below the rated value.

●Please follow the terminal connection diagram for wiring. Especially for the reverse connection of the power supply, it will cause an accident due to circuit damage such as heat, smoke, fire, etc.

● In order to ensure safety, especially for important uses, please be sure to consider double safety circuit configuration.

●Do not apply pressure above the maximum applied pressure. In addition, please be careful not to mix foreign matter into the pressure medium. Otherwise, the sensor will be discarded, or the media will blew out and cause an accident.

●Be careful when fixing the product and connecting the pressure inlet. Otherwise, accidents may occur due to sensor scattering and the blowing out of the media.

●If the sensor come with sharp PIN, please be careful not to hurt your body when using it.

【 WARRANTY 】

The information in this sheet has been carefully reviewed and is believed to be accurate; however, no responsibility is assumed for inaccuracies. Furthermore, this information does not convey to the purchaser of such devices any license under the patent rights to the manufacturer. CFSensor reserves the right to make changes without further notice to any product herein. CFSensor makes no warranty, representation or guarantee regarding the suitability of its product for any particular purpose, nor does CFSensor assume any liability arising out of the application or use of any product or circuit and specifically disclaims any and all liability, including without limitation consequential or incidental damages. Typical parameters can and do vary in different applications. All operating parameters must be validated for each customer application by customer's technical experts. CFSensor does not convey any license under its patent rights nor the rights of others.

【 CONTACT 】

CFSensor
22F/14Bldg High-Tech Park High-Tech Area Wuhu P.R.C.241000
Tel/Fax:+86 18226771331 Email:INFO@CFSensor.com

North America II Europe II Southeast Asia II Middle East II Latin America